CAN-PN

PROFINET IO / CAN Gateway

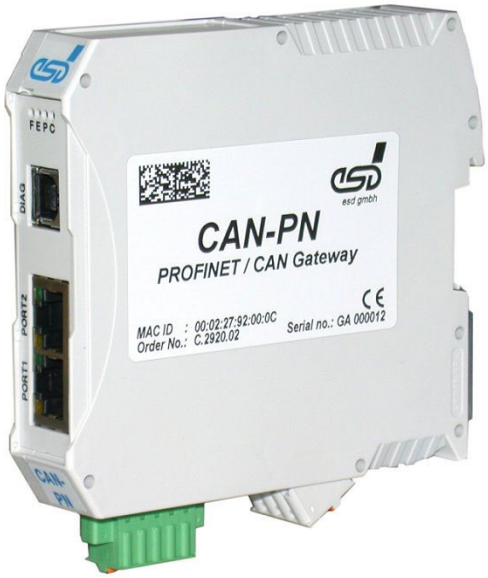

Hardware Manual

to Product C.2920.02

esd electronics gmbh
Vahrenwalder Str. 207 • 30165 Hannover • Germany
http://www.esd.eu
Phone: +49 (0) 511 3 72 98-0 • Fax: +49 (0) 511 3 72 98-68

N O T E

The information in this document has been carefully checked and is believed to be entirely reliable. **esd electronics** makes no warranty of any kind with regard to the material in this document, and assumes no responsibility for any errors that may appear in this document. In particular descriptions and technical data specified in this document may not be constituted to be guaranteed product features in any legal sense.

esd electronics reserves the right to make changes without notice to this, or any of its products, to improve reliability, performance or design.

esd electronics gmbh
Vahrenwalder Str. 207
30165 Hannover
Germany

Phone:	+49-511-372 98-0
Fax:	+49-511-372 98-68
E-Mail:	info@esd.eu
Internet:	www.esd.eu

⚠	This manual contains important information and instructions on safe and efficient handling of the CAN-PN. Carefully read this manual before commencing any work and follow the instructions. The manual is a product component, please retain it for future use.

Document file:	I:\Texte\Doku\MANUALS\CAN\CAN-PN\Englisch\CAN-PN_Hardware_en_15.odt
Date of print:	2023-06-01
Document type number:	DOC0800

Hardware version:	from Rev. 1.0

Document History

The changes in the document listed below affect changes in the hardware as well as changes in the description of the facts, only.

Revision	Chapter	Changes versus previous version	Date
1.4	9.	PNO certificate updated	2023-06-01
1.4	9.	EC declaration of conformity and PNO certificate updated	2020-02-07
1.3	-	Editorial revision	2016-10-21
	-	Safety notes revised, classification of warning messages inserted	
	5.5	Note about cable type inserted	
	6. + 7.	CAN wiring notes and trouble shooting guide revised	
	9.	EC declaration of conformity and PNO certificate updated	
1.2	-	Editorial revision	2014-01-02
	-	Safety notes revised	
	6. + 7.	CAN wiring notes and trouble shooting guide revised	
	9.	EC declaration of conformity and PNO certificate updated	
1.1	-	Security and conformity notes inserted at the beginning of the manual.	2009-09-29
	1.	Number of maximum input and output data changed.	
	1.1	Chapter "Safety Instructions" inserted.	
	1.2	Chapter "Service Note" inserted.	
	3.	Chapter "Starting Up" inserted	
	8.	Appendix inserted. Descriptions concerning optional InRailBus moved to appendix.	
1.0	all	First version of English hardware manual	2009-06-23

Technical details are subject to change without further notice.

Classification of Warning Messages and Safety Instructions

This manual contains noticeable descriptions, warning messages and safety instructions, which you must follow to avoid personal injuries and property damage.

This is the safety alert symbol.
It is used to alert you to potential personal injury hazards. Obey all safety messages and instructions that follow this symbol to avoid possible injury or death.

DANGER, WARNING, CAUTION

Depending on the hazard level the signal words DANGER, WARNING or CAUTION are used to highlight safety instructions and warning messages. These messages may also include a warning relating to property damage.

DANGER
Danger statements indicate a hazardous situation which, if not avoided, will result in death or serious injury.

WARNING
Warning statements indicate a hazardous situation that, if not avoided, could result in death or serious injury.

CAUTION
Caution statements indicate a hazardous situation that, if not avoided, could result in minor or moderate injury.

NOTICE

Notice statements are used to notify people on hazards that could result in things other than personal injury, like property damage.

NOTICE
This NOTICE statement contains the general mandatory sign and gives information that must be heeded and complied with for a safe use.

INFORMATION

INFORMATION
Notes to point out something important or useful.

Safety Instructions

- When working with the CAN-PN follow the instructions below and read the manual carefully to protect yourself from injury and the CAN-PN from damage.
- Do not use damaged or defective cables to connect the CAN-PN and follow the CAN wiring hints in chapter: "Correct Wiring of Electrically Isolated CAN Networks".
- In case of damages to the device, which might affect safety, appropriate and immediate measures must be taken, that exclude an endangerment of persons and domestic animals and property.
- Current circuits which are connected to the device have to be sufficiently protected against hazardous voltage (SELV according to EN 60950-1).
- The CAN-PN may only be driven by power supply current circuits, that are contact protected. A power supply, that provides a safety extra-low voltage (SELV) according to EN 60950-1, complies with this conditions.

- Do not open the housing of the CAN-PN.
- The CAN-PN has to be securely installed before commissioning.
- The permitted operating position is specified as shown (Figure: 14, page 33). Other operating positions are not allowed.
- Never let liquids get inside the CAN-PN. Otherwise, electric shocks or short circuits may result.
- Protect the CAN-PN from dust, moisture and steam.
- Protect the CAN-PN from shocks and vibrations.
- The CAN-PN may become warm during normal use. Always allow adequate ventilation around the CAN-PN and use care when handling.
- Do not operate the CAN-PN adjacent to heat sources and do not expose it to unnecessary thermal radiation. Ensure an ambient temperature as specified in the technical data.

Qualified Personnel
This documentation is directed exclusively towards personnel qualified in control and automation engineering.
The installation and commissioning of the product may only be carried out by qualified personnel, which is authorized to put devices, systems and electric circuits into operation according to the applicable national standards of safety engineering.

Conformity
The CAN-PN is an industrial product and meets the demands of the EU regulations and EMC standards printed in the conformity declaration at the end of this manual.

Warning: In a residential, commercial or light industrial environment the CAN-PN may cause radio interferences in which case the user may be required to take adequate measures.

Data Safety
This device is equipped with an Ethernet or other interface which is suitable to establish a connection to data networks. Depending on the software used on the device, these interfaces may allow attackers to compromise normal function, get illegal access or cause damage.
esd does not take responsibility for any damage caused by the device if operated at any networks.
It is the responsibility of the device's user to take care that necessary safety precautions for the device's network interface are in place.

Intended Use
The intended use of the CAN-PN is the operation as PROFINET IO / CAN gateway.
The guarantee given by esd does not cover damages which result from improper use, usage not in accordance with regulations or disregard of safety instructions and warnings.

- The CAN-PN is a built-in unit for installation e.g. in control cabinets.
- The operation of the CAN-PN in hazardous areas, or areas exposed to potentially explosive materials is not permitted.
- The operation of the CAN-PN for medical purposes is prohibited.

Service Note

The CAN-PN does not contain any parts that require maintenance by the user. The CAN-PN does not require any manual configuration of the hardware. Unauthorized intervention in the device voids warranty claims.

Disposal

Devices which have become defective in the long run have to be disposed in an appropriate way or have to be returned to the manufacturer for proper disposal. They must not be disposed of with household waste.
Please, make a contribution to environmental protection.

Typographical Conventions

Throughout this manual the following typographical conventions are used to distinguish technical terms.

Convention	Example
File and path names	**`/dev/null`** or **`<stdio.h>`**
Function names	***open()***
Programming constants	`NULL`
Programming data types	`uint32_t`
Variable names	*Count*

Number Representation

All numbers in this document are base 10 unless designated otherwise. Hexadecimal numbers have a prefix of 0x, and binary numbers have a prefix of 0b. For example, 42 is represented as 0x2A in hexadecimal and 0b101010 in binary.

Abbreviations

API	Application Programming Interface
CAN	Controller Area Network
CPU	Central Processing Unit
CiA	CAN in Automation
HW	Hardware
I/O	Input/Output
LSB	Least Significant Bit
MSB	Most Significant Bit
n.a.	not applicable
OS	Operating System
SDK	Software Development Kit

Table of Contents

1. Overview

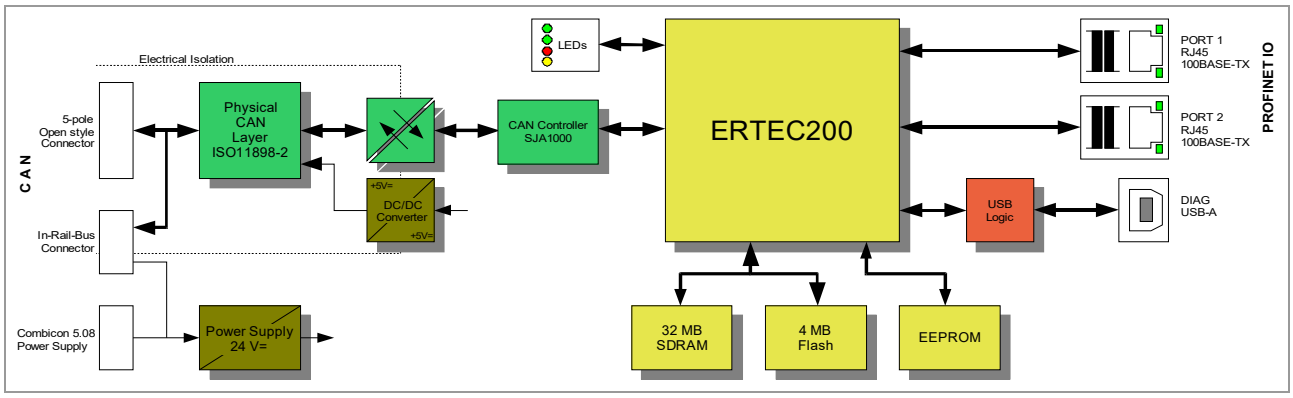

Figure 1: Block circuit diagram

The module CAN-PN can link any PROFINET® IO-controller to a CAN network. The CAN-PN gateway itself operates as a PROFINET IO-device with a maximum of 256 bytes input data and 256 bytes output data on the PROFINET IO bus.

The CAN-PN connects CAN modules with CANopen® (CiA® DS 301) or layer-2 (ISO 11898-1) applications to e.g. a SIMATIC-S7.
The number of CAN participants is not limited by the gateway.

The CAN-PN module operates internally with an ARM® processor ERTEC200 type, which buffers the CAN and PROFINET IO data in a local SDRAM. The firmware and configuration data are kept in the Flash. Parameters are stored by means of a serial EEPROM.

The CAN high speed (ISO 11898-2) compatible CAN-interface allows a maximum data-transfer rate of 1 Mbit/s.
The 100BASE-TX PROFINET-IO interface is compatible to IEEE802.3 and runs with 100 Mbit/s.

The PROFINET-IO as well as the CAN interface are electrically isolated.
According to standard, the PROFINET-IO interface is equipped with two RJ-45-sockets. An Ethernet switch is integrated in the ERTEC200.
CAN is connected via a 5-pin COMBICON spring force plug.

The module can be configured via PROFINET IO configuration tool, e.g. the PLC SIMATIC Manager or the TIA Portal. No additional configuration tools are required!

2. Hardware-Installation

2.1 Connections

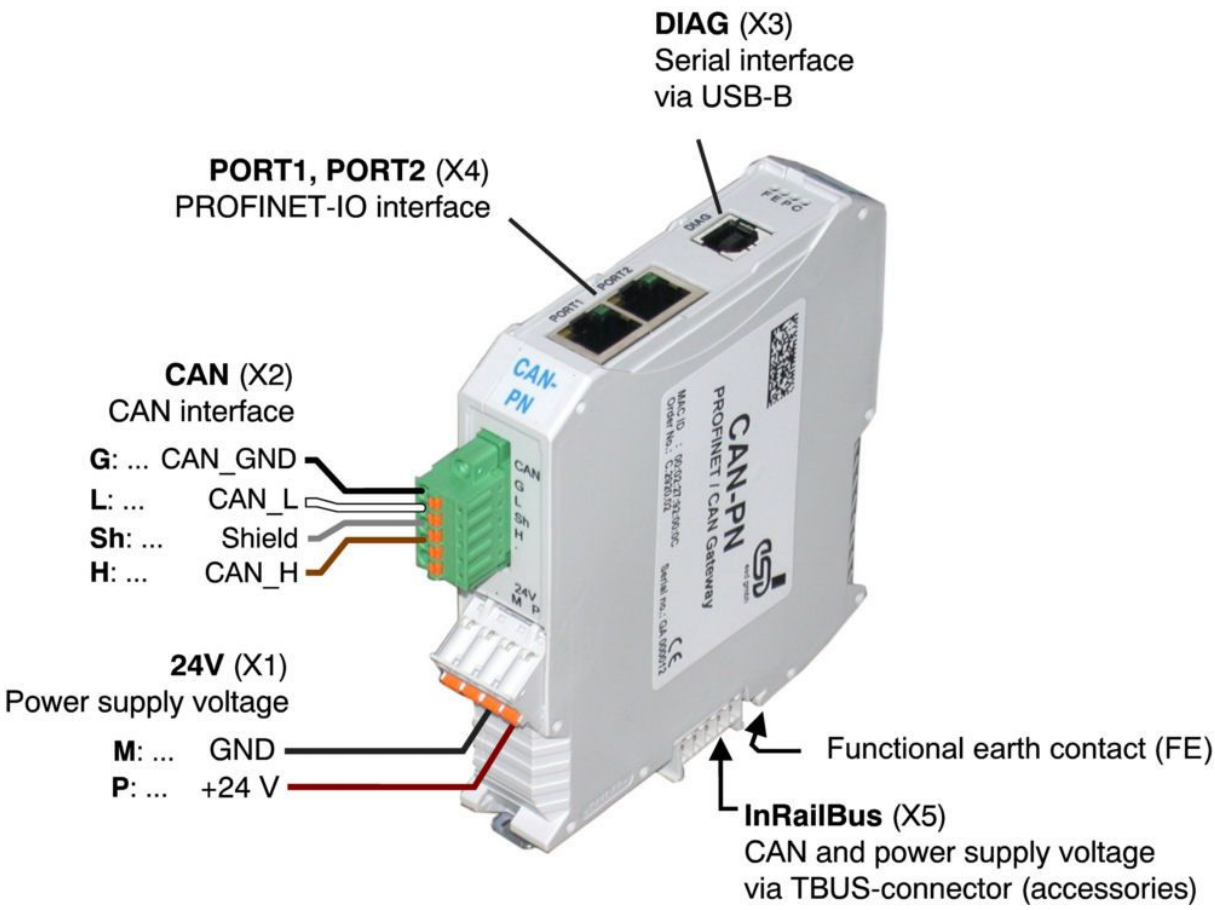

Figure 2: Connections in operable state

See also from page 16 for signal assignments of the connectors.
For conductor connection and conductor cross section see page 18.

NOTICE
Read chapter “Starting Up” on page 13, before you start with the installation of the hardware!

2.2 LED-Assignment

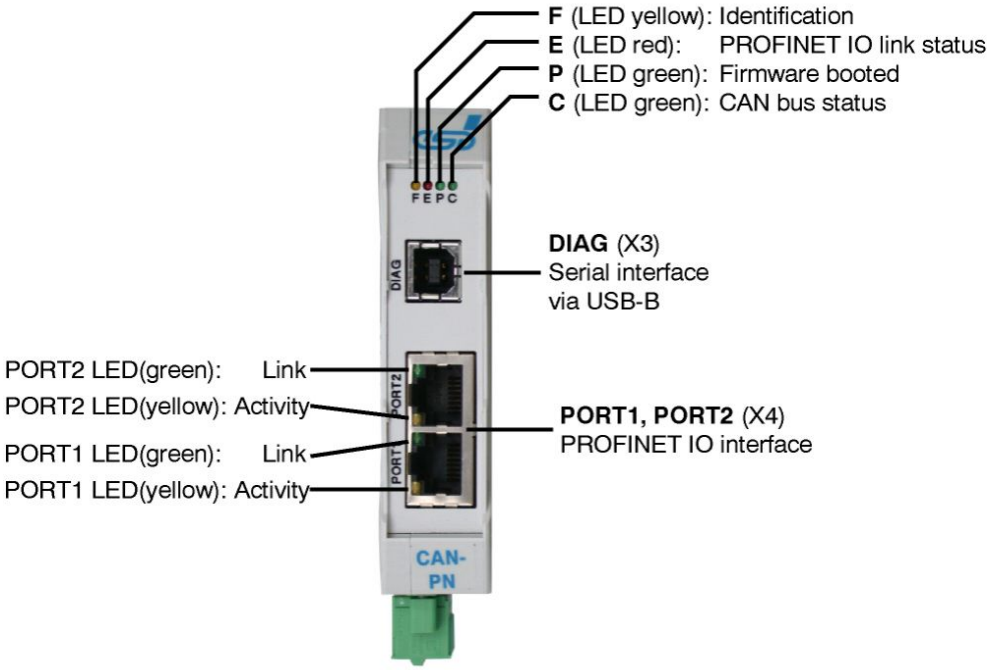

Figure 3: Position of the LEDs in the front panel

LED	Colour	Function	Indication	Description	LED name in schematic diagram
F	yellow	Identification	off	no request of the SIMATIC-Manager for identification of the unit	LED1A
			blinking	request of the SIMATIC-Manager for identification of the unit	
E	red	PROFINET IO link status	off	valid PROFINET IO connection exists	LED1B
			on	no valid PROFINET IO connection	
P	green	Firmware booted	off	firmware not yet booted.	LED1C
			on	firmware booted.	
C	green	CAN bus status	off	no power supply	LED1D
			1x short flash	CAN Error (morse code "E")	
			3x short flash	CAN Off (morse code "O")	
			short-long-long	CAN Warning (morse code "W")	
			on	CAN bus OK	

Table 1: Indication of the LEDs

PROFINET-IO-RJ-45-Socket-LEDs of PORT1 and PORT2

LED	Colour	Indication	Description
Link	green	off	no PROFINET IO or Ethernet connection
		on	PROFINET IO or Ethernet connection exists.
Activity	yellow	off	no PROFINET IO connection
		blinking	configuration
		on	PROFINET IO connection active

Table 2: Indication of the RJ-45-LEDs

3. Starting Up

To start up the CAN-PN follow the instructions below.

Step	Procedure	see page
	Read the safety instructions at the beginning of this document carefully, before you start with the hardware installation!	5
	Danger Hazardous Voltage - Risk of electric shock due to unintentional contact with uninsulated live parts with high voltages inside of the system into which the CAN-PN is to be integrated. → All current circuits which are connected to the device have to be sufficiently protected against hazardous voltage (SELV according to EN 60950-1) before you start with the installation. → Ensure the absence of voltage before starting any electrical work.	
1.	Mount the CAN-PN module and connect power supply voltage CAN bus and PROFINET-IO.	10
2.	Please note that the CAN bus has to be terminated at both ends! **esd** offers special T-connectors and termination connectors for external termination. Additionally the CAN_GND signal has to be connected to earth at **exactly one** point in the CAN network. All esd termination devices will provide a corresponding contact. For details please read chapter “Correct Wiring of Electrically Isolated CAN Networks”.	21
3.	Continue with the installation of the software, as described in the software manual of the CAN-PN in chapter: 'Implementation'.	-

4. Technical Data

4.1 General Technical Data

Power supply voltage	nominal voltage 24 V/DC ±10%, current consumption (24 V, 20 °C): typical: 120 mA
Connectors	24V 24V-power supply voltage (X1, 4-pin COMBICON-plug with spring-cage connection) CAN CAN bus interface (X2, 5-pin Phoenix Contact MC 1,5/5-GF-3,81) DIAG DIAG-interface (X3, USB-socket type B) PORT1, PORT2 PROFINET IO-interface PORT1, PORT2 (X4, 2x RJ-45-socket with integrated transformer and LEDs) InRailBus CAN bus interface and power supply voltage via InRailBus (X5, 5-pin ME-MAX-TBUS-connector, accessories)
Temperature range	0...50 °C ambient temperature
Humidity	max. 90%, non-condensing
Dimensions	width: 22.5 mm, height: 99 mm, depth: 114.5 mm (without connectors)
Weight	130 g

Table 3: General data of the module

4.2 Microcontroller

Microcontroller	ERTEC200, 150 MHz
Memory	SDRAM: 32 MB NOR-Flash: 4 Mbyte SPI-EEPROM 128Kbit

Table 4: Microcontroller unit

4.3 CAN Interface

Number of CAN interfaces	1 x CAN
CAN controller	SJA1000, ISO 11898-1
Electrical isolation	CAN interface isolated by digital isolators and DC/DC converter
Physical CAN Layer	Physical layer according to ISO 11898-2, transmission rate programmable from 10 Kbit/s to 1 Mbit/s
Bus termination	Terminating resistor has to be set externally, if required
Connector	CAN (X2) 5-pin COMBICON or optional via InRailBus (X5)

Table 5: Data of the CAN interface

4.4 PROFINET IO Interface

Number of interfaces	2, PROFINET IO PORT1, PORT2
Connection	RJ-45, BASE-TX, 100 Mbit/s, compatible to IEEE 802.3, electrical isolation via RJ-45-socket with integrated transformer
Controller	ERTEC200
Connector	PORT1, PORT2 (X4), 2x RJ-45 socket with integrated transformer and LEDs

Table 6: Data of PROFINET IO interface

4.5 DIAG, Serial Interface via USB-Interface

Type	USB, Virtual COM Port
USB-specification	USB 2.0 Full Speed (12Mbit/s)
Connector	DIAG (X3), USB-socket type-B

Table 7: Data of the USB interface

5. Interfaces and Connector Assignments

5.1 24V-Power Supply Voltage

The power supply voltage can be fed via connector 24V (X1) or optional via InRailBus (connector assignment see page 18).

Device connector: Phoenix Contact MSTBO 2,5/4-G1L-KMGY
Line connector: Phoenix Contact FKCT 2,5/4-ST, 5.0 mm pitch,
spring-cage connection (included in the scope of delivery)
For conductor connection and conductor cross section see page 18

Pin Position:

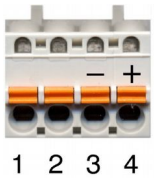

Pin Assignment:

Imprint of the housing	24V			
	.	.	M	P
Imprint of the connector	(none)	(none)	-	+

Pin no.	1	2	3	4
Signal	**Do not connect!**	**Do not connect!**	M24 (GND)	P24 (+ 24 V)

Please refer to the connecting diagram page 10.

NOTICE
It is **not permissible** to feed through the power supply voltage through the connector 24V (X1) and to supply the power supply voltage to another CAN module station!
A feed through of the +24 V power supply voltage can cause damage on the modules.

Signal Description:

P24... power supply voltage +24 V ±10 %
M24... reference potential

5.2 CAN

The CAN interface can be connected via CAN connector (X2) or optional via InRailBus.
Use the mounting-rail bus connector of the CBX-InRailBus for the connection via the InRailBus, see order information in the appendix (page 38).

Device connector: Phoenix Contact MC 1,5/5-GF-3,81
Line connector: Phoenix Contact FK-MCP 1,5/5-STF-3,81, spring-cage connection (included in delivery)
For conductor connection and conductor cross section see page 18

Pin Position:

(Illustration of device connector)

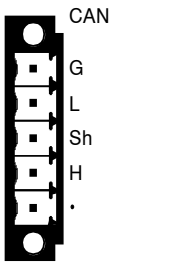

Pin Assignment:

Aufdruck	Signal	Pin
G	CAN_GND	1
L	CAN_L	2
Sh	Shield	3
H	CAN_H	4
•	-	5

Signal Description:

CAN_L, CAN_H ... CAN signals
CAN_GND ... reference potential of the local CAN physical layer
Shield ... pin for line shield connection (using hat rail mounting direct contact to the mounting rail potential)
- ... not connected

Recommendation of an adapter cable from 5-pin COMBICON (here line connector FK-MCP1,5/5-STF_3,81 with spring-cage-connection) to 9-pin DSUB:

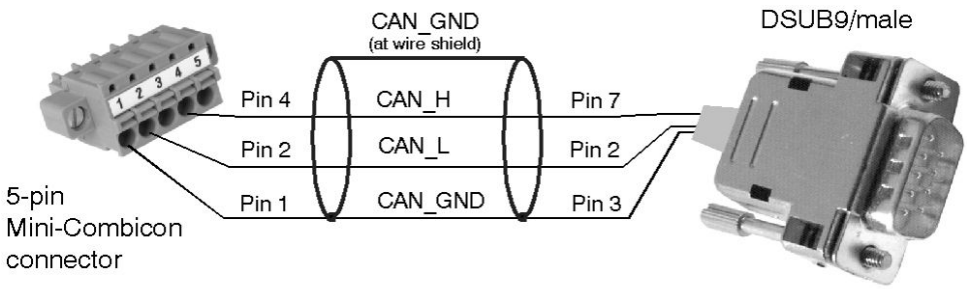

The assignment of the 9-pin DSUB-connector and the 5-pin Mini-COMBICON is designed according to CiA 303 Part 1.

5.3 24V and CAN via InRailBus

Power supply voltage and CAN can optionally be fed via InRailBus.
Use the mounting-rail bus connector of the CBX-InRailBus for the connection via the InRailBus, see order information on page 38.
Take notice of the instructions for connecting power supply and CAN signals via InRailBus in the appendix!

5.4 Conductor Connection/Conductor Cross Sections

The following table contains an extract of the technical data of the connector plugs[1].

Interface	**Power Supply 24 V**	**CAN-Connector**
Connector type plug component (Range of articles)	FKCT 2,5/..-ST KMGY	FK-MCP 1,5/5-STF-3,81
Connection method	spring-cage connection	spring-cage connection
Stripping length	10 mm	9 mm
Conductor cross section solid min. / max.	0.2 mm² / 2.5 mm²	0.14 mm² / 1.5 mm²
Conductor cross section stranded min. / max.	0.2 mm² / 2.5 mm²	0.14 mm² / 1.5 mm²
Conductor cross section stranded, with ferrule without plastic sleeve min. / max.	0.25 mm² / 2.5 mm²	0.25 mm² / 1.5 mm²
Conductor cross section stranded, with ferrule with plastic sleeve min. / max.	0.25 mm² / 2.5 mm²	0.25 mm² / 0.5 mm²
Conductor cross section AWG/kcmil min. / max.	24 / 12	26 / 16
2 conductors with same cross section, stranded, TWIN ferrules with plastic sleeve, min. / max.	0.5 mm² / 1.5 mm²	not allowed
Minimum AWG according to UL/cUL	26	28
Maximum AWG according to UL/cUL	12	16

1 Technical Data from Phoenix Contact website, printed circuit board connector, plug component

5.5 PORT1, PORT2 - PROFINET IO

An Ethernet-Switch and the Ethernet PHYs are integrated in the ERTEC200.

The PROFINET IO ports PORT1 and PORT2 have got equal rights and no preferred direction.

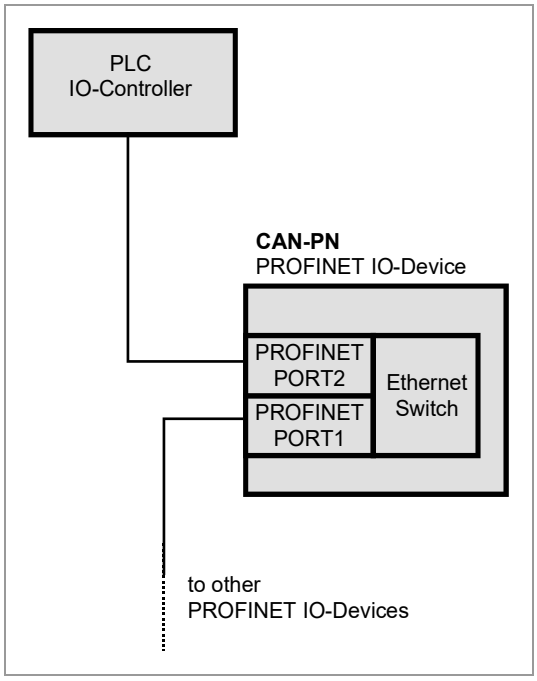

Figure. 4: Example for the connection of PROFINET IO-ports

Device connector: 2x RJ45 with integrated transformer and LEDs (yellow/green)

Connector View:

Pin Assignment:

The pin assignment is designed compatible to IEEE 802.3 for 100BASE-TX, RJ45 socket.

NOTICE
Cables of category CAT5 or higher have to be used to grant the function in networks with 100 Mbit/s. esd grants the EC conformity of the product if the wiring is carried out with shielded twisted pair cables.

5.6 DIAG

The diagnosis interface (X3) is realised as Virtual COM Port via USB interface.

5.6.1 Default Settings of CAN-PN

The default setting of the Virtual COM-Port is:
Bit rate: 115 200 Baud
Data bits: 8
Parity: no
Stop bits: 1
Handshake: no

INFORMATION
For the diagnosis these default settings have to be entered in the Terminal-Program used (e.g. 'Tera Term' or 'PuTTY').

When Updates are installed the default settings are automatically transferred by the update program.

5.6.2 Connector Assignment

INFORMATION
The module may only be connected to USB nets with USB interfaces with version 1.1 or 2.0!
Operability can only be guaranteed for these USB-interfaces.

Pin Position:

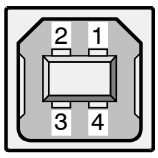

Pin Assignment:

Pin	Signal
1	V_{BUS}
2	D-
3	D+
4	GND
Shell	Shield

USB socket (Type B)

6. Correct Wiring of Electrically Isolated CAN Networks

NOTICE
This chapter applies to CAN networks with bit rates up to 1 Mbit/s.
If you work with higher bit rates, as for example used for CAN FD, the information given in this chapter must be examined for applicability in each individual case.
For further information refer to the CiA® CAN FD guidelines and recommendations (https://www.can-cia.org/).

For the CAN wiring all applicable rules and regulations (EU, DIN), e.g. regarding electromagnetic compatibility, security distances, cable cross-section or material, have to be observed.

6.1 CAN Wiring Standards

The flexibility in CAN network design is a major strength of the various extensions based on the original CAN standard ISO 11898-2, such as CANopen®, ARINC825, DeviceNet® and NMEA2000. However, taking advantage of this flexibility absolutely requires a network design that considers the interactions of all network parameters.

In some cases, the CAN organizations have adapted the scope of CAN in their specifications to enable applications outside the ISO 11898 standard. They have imposed system-level restrictions on data rate, line length and parasitic bus loads.

However, when designing CAN networks, a margin must always be planned for signal losses over the entire system and cabling, parasitic loads, network imbalances, potential differences against earth potential, and signal integrities. **Therefore, the maximum achievable number of nodes, bus lengths and stub lengths may differ from the theoretically possible number!**

esd has limited its recommendations for CAN wiring to the specifications of ISO 11898-2.
A description of the special features of the derived specifications CANopen, ARINC825, DeviceNet, and NMEA2000 is omitted here

The consistent compliance with ISO 11898-2 standard offers significant advantages:

- Reliable operation due to well proven design specifications
- Minimization of error sources due to sufficient distances to physical limits
- Easy maintenance because there are no "special cases" to consider for future network modifications and troubleshooting

Of course reliable networks can be designed according to the specifications of CANopen, ARINC825, DeviceNet and NMEA2000, **however it must be observed that it is strictly not recommended to mix the wiring guidelines of the various specifications!**

6.2 Light Industrial Environment (*Single* Twisted Pair Cable)

6.2.1 General Rules

NOTICE
esd grants the EU Conformity of the product, if the CAN wiring is carried out with at least single shielded **single** twisted pair cables that match the requirements of ISO 11898-2. Single shielded *double* twisted pair cable wiring as described in chapter 6.3. ensures the EU Conformity as well.

The following **general rules** for CAN wiring with single shielded *single* twisted pair cable should be followed:

1	A suitable cable type with a wave impedance of about 120 Ω ±10% with an adequate conductor cross-section (≥ 0.22 mm²) must be used. The voltage drop over the wire must be considered.
2	For light industrial environment use at least a two-wire CAN cable, the wires of which must be assigned as follows: • Two twisted wires must be assigned to the data signals (CAN_H, CAN_L). • The cable shield must be connected to the reference potential (CAN_GND).
3	The reference potential CAN_GND must be connected to the functional earth (FE) at exactly **one** point.
4	A CAN bus line must not branch (exception: short cable stubs) and must be terminated with the characteristic impedance of the line (generally 120 Ω ±10%) at both ends (between the signals CAN_L and CAN_H and **not** at CAN_GND).
5	Keep cable stubs as short as possible (l < 0.3 m).
6	Select a working combination of bit rate and cable length.
7	Keep away cables from disturbing sources. If this cannot be avoided, double shielded wires are recommended.

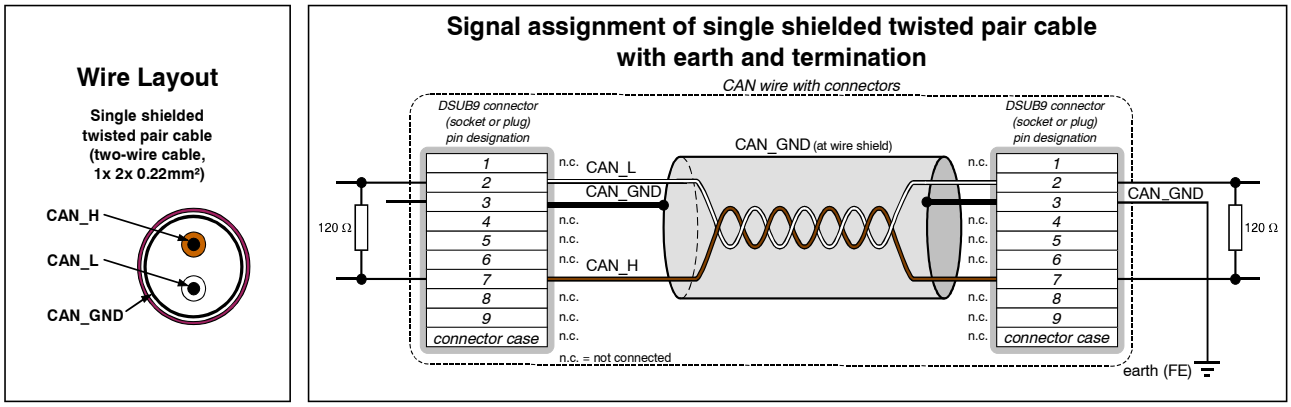

Figure 5: CAN wiring for light industrial environment

6.2.2 Cabling

- To connect CAN devices with just one CAN connector per net use a short stub (< 0.3 m) and a T-connector (available as accessory). If this devices are located at the end of the CAN network, the CAN terminator “CAN-Termination-DSUB9” can be used.

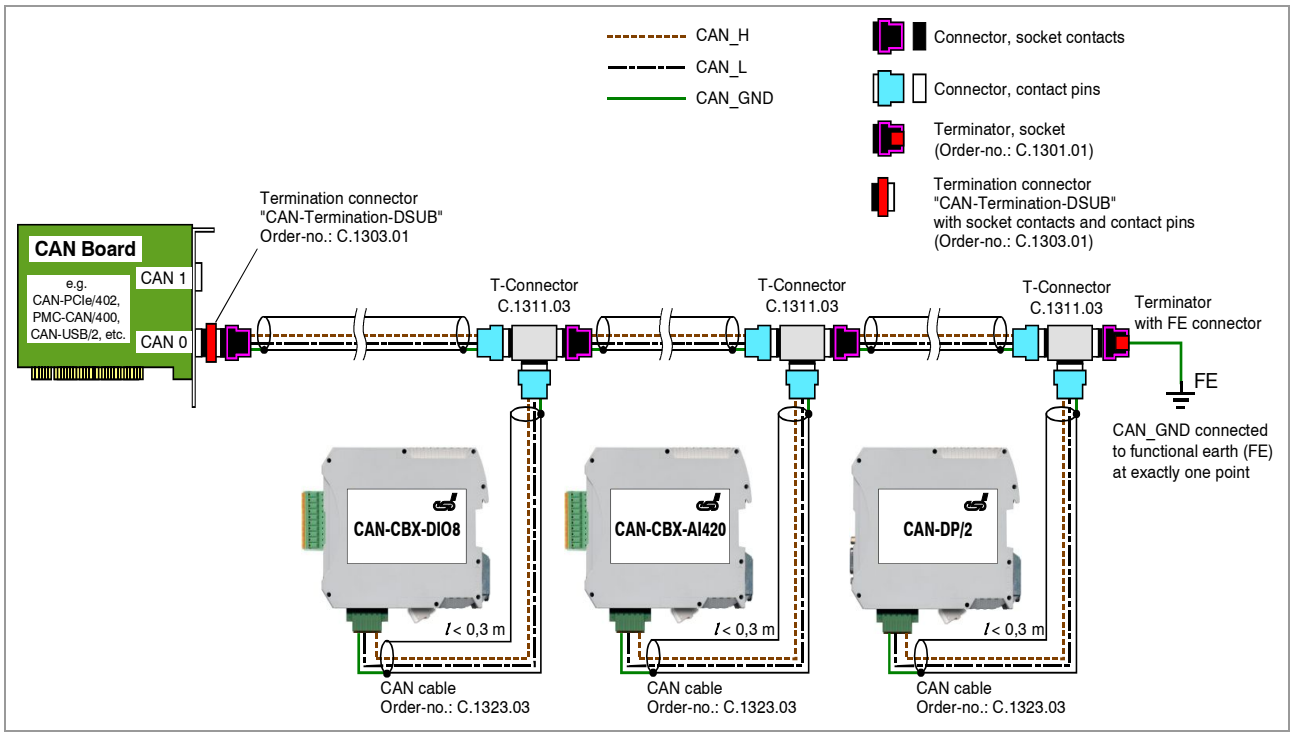

Figure 6: Example for proper wiring with single shielded single twisted pair wires

6.2.3 Branching

- In principle the CAN bus must be realized in a line. The nodes are connected to the main CAN bus line via short cable stubs. This is normally realised by so called T-connectors. esd offers the CAN-T-Connector (Order No.: C.1311.03)
- If a mixed application of single twisted and double twisted cables cannot bei avoided, ensure that the CAN_GND line is not interrupted!
- Deviations from the bus structure can be realized by the usage of repeaters.

6.2.4 Termination

- A termination resistor must be connected at both ends of the CAN bus. If an integrated CAN termination resistor is connected to the CAN interface at the end of the CAN bus, this integrated termination must be used instead of an external CAN termination resistor.
- 9-pole DSUB-termination connectors with integrated termination resistor and pin contacts and socket contacts are available from esd (order no. C.1303.01).
- For termination of the CAN bus and grounding of the CAN_GND, DSUB terminators with pin contacts (order no. C.1302.01) or socket contacts (order no. C.1301.01) and with additional functional earth contact are available.

6.3 Heavy Industrial Environment (*Double* Twisted Pair Cable)

6.3.1 General Rules

The following **general rules** for the CAN wiring with single shielded *double* twisted pair cable should be followed:

1	A suitable cable type with a wave impedance of about 120 Ω ±10% with an adequate conductor cross-section (≥ 0.22 mm²) has to be used. The voltage drop over the wire must be considered.
2	For heavy industrial environment use a four-wire CAN cable, the wires of which must be assigned as follows: • Two twisted wires must be assigned to the data signals (CAN_H, CAN_L). • The other two twisted wires must be assigned to the reference potential (CAN_GND). • The cable shield must be connected to functional earth (FE) at least at one point.
3	The reference potential CAN_GND must be connected to the functional earth (FE) at exactly **one** point.
4	A CAN bus line must not branch (exception: short cable stubs) and must be terminated with the characteristic impedance of the line (generally 120 Ω ±10%) at both ends (between the signals CAN_L and CAN_H and **not** to CAN_GND).
5	Keep cable stubs as short as possible (l < 0.3 m).
6	Select a working combination of bit rate and cable length.
7	Keep away CAN cables from disturbing sources. If this cannot be avoided, double shielded cables are recommended.

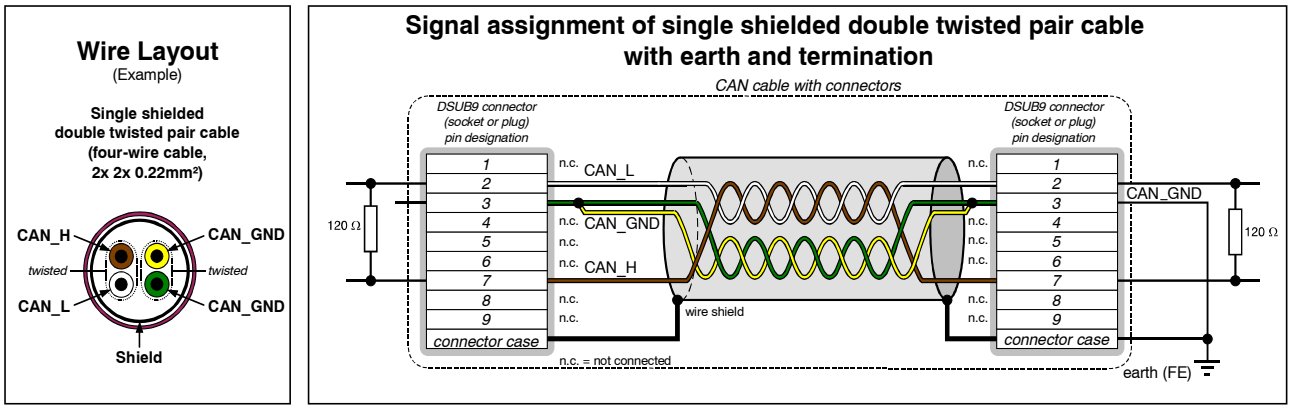

Figure 7: CAN wiring for heavy industrial environment

6.3.2 Device Cabling

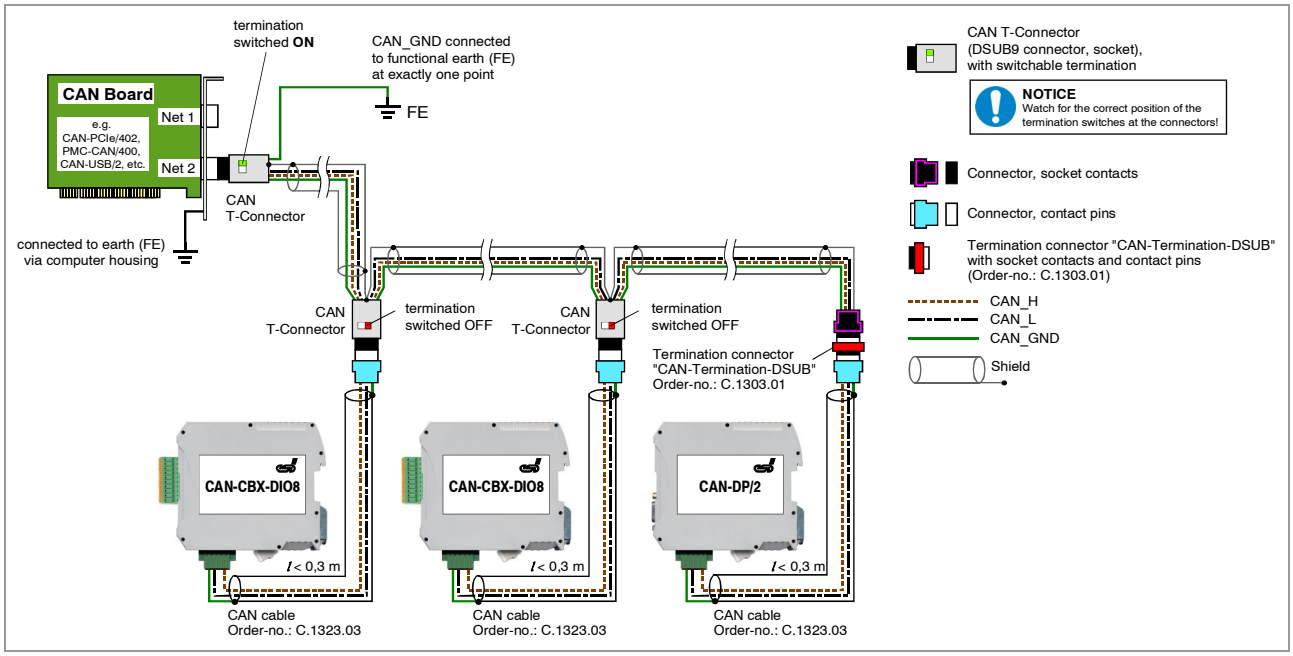

Figure 8: Example of proper wiring with single shielded double twisted pair cables

6.3.3 Branching

- In principle the CAN bus must be realized in a line. The nodes are connected to the main CAN bus line via short cable stubs. This is usually realised by so called T-connectors. When using esd's CAN-T-Connector (order no.: C.1311.03) in heavy industrial environment and with four-wire twisted cables, it must be noted that the shield potential of the conductive DSUB housing is not looped through this type of T-Connector.This interrupts the shielding. Therefore, you must take appropriate measures to connect the shield potentials, as described in the manual of the CAN-T-Connector. For further information on this, please refer to the CAN-T-Connector Manual (order no.: C.1311.21).
  Alternatively, a T-connector can be used, in which the shield potential is looped through, for example the DSUB9 connector from ERNI (ERBIC CAN BUS MAX, order no.:154039).
- If a mixed application of single twisted and double twisted cables cannot be avoided, ensure that the CAN_GND line is not interrupted!
- Deviations from the bus structure can be realized by using repeaters.

6.3.4 Termination Resistor

- A termination resistor must be connected at both ends of the CAN bus. If an integrated CAN termination resistor is connected to the CAN interface at the end of the CAN bus, this integrated termination must be used instead of an external CAN termination resistor.
- 9-pole DSUB-termination connectors with integrated termination resistor and pin contacts and socket contacts are available from esd (order no. C.1303.01).
- 9-pole DSUB-connectors with integrated switchable termination resistor can be ordered for example from ERNI (ERBIC CAN BUS MAX, socket contacts, order no.:154039).

6.4 Electrical Grounding

- For CAN devices with electrical isolation the CAN_GND must be connected between the CAN devices.
- CAN_GND should be connected to the earth potential (FE) at **exactly one** point of the network.
- Each *CAN interface with electrical connection to earth potential* acts as a grounding point. For this reason it is recommended not to connect more than one *CAN device with electrical connection to earth potential.*
- Grounding can be done for example at a termination connector (e.g. order no. C.1302.01 or C.1301.01).

6.5 Bus Length

The bus length of a CAN network must be adapted to the set bit rate. The maximum values result from the fact that the time required for a bit to be transmitted in the bus system is shorter the higher the transmission rate is. However, as the line length increases, so does the time it takes for a bit to reach the other end of the bus. It should be noted that the signal is not only transmitted, but the receiver must also respond to the transmitter within a certain time. The transmitter, in turn, must detect any change in bus level from the receiver(s). Delay times on the line, the transceiver, the controller, oscillator tolerances and the set sampling time must be considered.
In the following table you will find guide values for the achievable bus lengths at certain bit rates.

Bit-Rate [kbit/s]	Theoretical values of reachable wire length **with esd interface** l_{max} [m]	**CiA recommendations** (07/95) for reachable wire lengths l_{min} [m]	Standard values of the cross-section according to CiA 303-1 [mm²]
1000	37	25	0,25 to 0,34
800 666,$\overline{6}$ 500 333,$\overline{3}$ 250	59 80 130 180 270	50 - 100 - 250	0,34 to 0,6
166 125	420 570	- 500	0,5 to 0,6
100 83,$\overline{3}$ 66,$\overline{6}$ 50	710 850 1000 1400	650 - - 1000	0,75 to 0,8
33,$\overline{3}$ 20 12,5 10	2000 3600 5400 7300	- 2500 - 5000	not defined in CiA 303-1

Table 8: Recommended cable lengths at typical bit rates (with esd-CAN interfaces)

Optical couplers are delaying the CAN signals. esd modules typically achieve a wire length of 37 m at 1 Mbit/s within a proper terminated CAN network without impedance disturbances, such as those caused by cable stubs > 0.3 m.

NOTICE
Please note that the cables, connectors and termination resistors used in CANopen networks shall meet the requirements defined in ISO11898-2.
In addition, further recommendations of the CiA, like standard values of the cross section, depending on the cable length, are described in the CiA recommendation CiA 303-1 (see CiA 303 CANopen Recommendation - Part 1: „Cabling and connector pin assignment“, Version 1.9.0, Table 2). Recommendations for pin-assignment of the connectors are described in CiA 106: “Connector pin-assignment recommendations ”.

6.6 Examples for CAN Cables

esd recommends the following two-wire and four-wire cable types for CAN network design. These cable types are used by esd for ready-made CAN cables, too.

6.6.1 Cable for Light Industrial Environment Applications (Two-Wire)

Manufacturer	Cable Type
U.I. LAPP GmbH Schulze-Delitzsch-Straße 25 70565 Stuttgart Germany www.lappkabel.com	e.g. UNITRONIC ®-BUS CAN UL/CSA (1x 2x 0.22) (UL/CSA approved) Part No.: 2170260 UNITRONIC ®-BUS-FD P CAN UL/CSA (1x 2x 0.25) (UL/CSA approved) Part No.: 2170272
ConCab GmbH Äußerer Eichwald 74535 Mainhardt Germany www.concab.de	e. g. BUS-PVC-C (1x 2x 0.22 mm²) Order No.: 93 022 016 (UL appr.) BUS-Schleppflex-PUR-C (1x 2x 0.25 mm²) Order No.: 94 025 016 (UL appr.)

6.6.2 Cable for Heavy Industrial Environment Applications (Four-Wire)

Manufacturer	Cable Type
U.I. LAPP GmbH Schulze-Delitzsch-Straße 25 70565 Stuttgart Germany www.lappkabel.com	e.g. UNITRONIC ®-BUS CAN UL/CSA (2x 2x 0.22) (UL/CSA approved) Part No.: 2170261 UNITRONIC ®-BUS-FD P CAN UL/CSA (2x 2x 0.25) (UL/CSA approved) Part No.: 2170273
ConCab GmbH Äußerer Eichwald 74535 Mainhardt Germany www.concab.de	e. g. BUS-PVC-C (2x 2x 0.22 mm²) Order No.: 93 022 026 (UL appr.) BUS-Schleppflex-PUR-C (2x 2x 0.25 mm²) Order No.: 94 025 026 (UL appr.)

INFORMATION
Ready-made CAN cables with standard or custom length can be ordered from **esd**.

7. CAN Troubleshooting Guide

The CAN Troubleshooting Guide is a guide to finding and eliminating the most common problems and errors when setting up CAN bus networks and CAN-based systems.

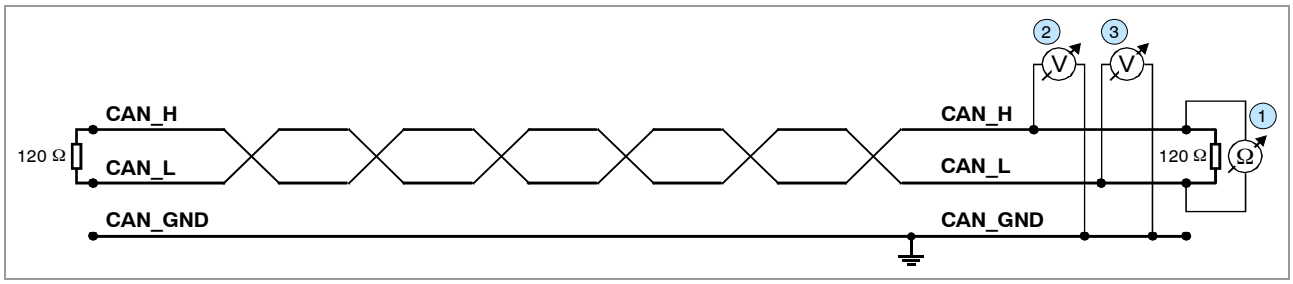

Figure 9: Simplified diagram of a CAN network

7.1 Termination

The bus termination is used to match impedance of a node to the impedance of the bus line used. If the impedance is mismatched, the transmitted signal is not completely absorbed by the load and will be partially reflected back into the transmission line.
If the impedances of the sources, transmission lines and loads are equal, the reflections are avoided. This test measures the total resistance of the two CAN data lines and the connected terminating resistors.

To test this, please proceed as follows:

1. Switch off all supply voltages of all connected CAN nodes.
2. Measure the DC resistance between CAN_H and CAN_L at one end of the network, measuring point 1 (see figure above).

Expected result:
The measured value should be between 50 Ω and 70 Ω.

Possible causes of error:
▪ If the value is below 50 Ω, please make sure that:
- There is no **short circuit** between CAN_H and CAN_L wiring.
- **No more than two** terminating resistors are connected.
- The transceivers of the individual nodes are not defective.

▪ If the determined value is higher than 70 Ω, please make sure that:
- All CAN_H and CAN_L lines are correctly connected.
- Two terminating resistors of 120 Ω each are connected to your CAN network (one at each end).

7.2 Electrical Grounding

The CAN_GND of the CAN network should be connected to the functional earth potential (FE) at only **one** point. This test indicates whether the CAN_GND is grounded at one or more points.

Please note that this test can only be performed with electrically isolated CAN nodes.

To test this, please proceed as follows:

1. Disconnect the CAN_GND from the earth potential (FE).
2. Measure the DC resistance between CAN_GND and earth potential (see figure on the right).

Do not forget to reconnect CAN_GND to earth potential after the test!

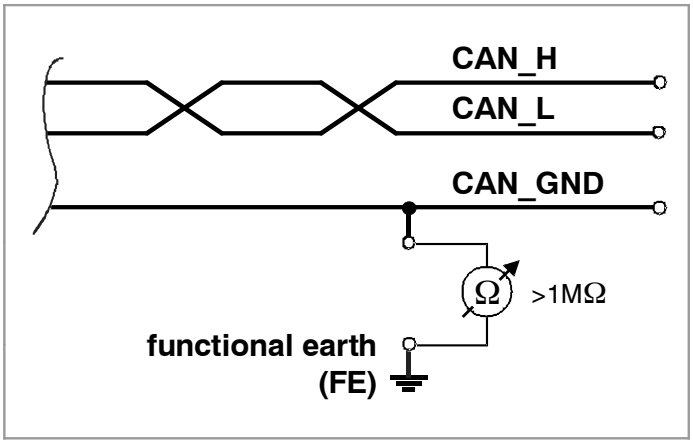

Figure 10: Simplified schematic diagram of ground test measurement

Expected result:
The measured resistance should be higher than 1 MΩ. If it is lower, please search for additional grounding of the CAN_GND wires.

7.3 Short Circuit in CAN Wiring

A CAN bus might possibly still be able to transmit data even if CAN_GND and CAN_L are short-circuited. However, this will usually cause the error rate to rise sharply.
Ensure that there is no short circuit between CAN_GND and CAN_L!

7.4 Correct Voltage Levels on CAN_H and CAN_L

Each node contains a CAN transceiver that outputs differential signals. When the network communication is idle the CAN_H and CAN_L voltages are approximately 2.5 V measured to CAN_GND. Defective transceivers can cause the idle voltages to vary and disrupt network communication.

To test for defective transceivers, please proceed as follows:

1. Switch on all supply voltages.
2. Terminate all network communication.
3. Measure the DC voltage between CAN_H and CAN_GND, measuring point ② (see “Simplified diagram of CAN network” on previous page).
4. Measure the DC voltage between CAN_L and CAN_GND, measuring point ③ (see “Simplified diagram of CAN network” on previous page).

Expected result:
The measured voltage should be between 2.0 V and 3.0 V.

Possible causes of error:

- If it is lower than 2.0 V or higher than 3.0 V, it is possible that one or more nodes have defective transceivers.
  - If the voltage is lower than 2.0 V, please check the connections of the CAN_H and CAN_L lines.

- To find a node with a defective transceiver within a network, please check individually the resistances of the CAN transceivers of the nodes (see next section).

7.5 CAN Transceiver Resistance Test

CAN transceivers have circuits that control CAN_H and CAN_L. Experience shows that electrical damage of the circuits may increase the leakage current in these circuits.

To measure the current leakage through the CAN circuits, please use an ohmmeter and proceed as follows:

1. Switch **off** the node (4) and **disconnect** it from the network (see figure below).

2. Measure the DC resistance between CAN_H and CAN_GND, measuring point (5) (see figure below).

3. Measure the DC resistance between CAN_L and CAN_GND, measuring point (6) (see figure below).

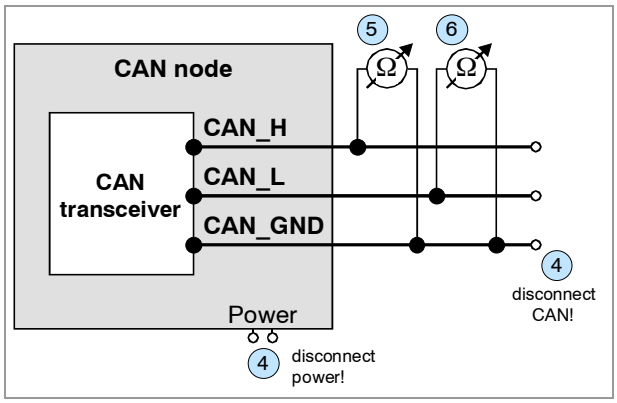

Figure 11: Measuring the internal resistance of CAN transceivers

Expected result:
The measured resistance should be greater than 10 kΩ for each measurement.

Possible causes of error:

- If the resistance is significantly lower, the CAN transceiver may be defective.
- Another indication of a defective CAN transceiver is a very high deviation of the two measured input resistances (>> 200 %).

7.6 Support by esd

If you have followed the troubleshooting steps in this troubleshooting guide and still cannot find a solution to your problem, our support team can help.
Please contact our support by email to **support@esd.eu** or by phone **+49-511-37298-130**.

8. Appendix InRailBus (Option)

8.1 Connector Assignment

Connector type: Mounting-rail bus connector of the CBX-InRailBus
Phoenix Contact ME 22,5 TBUS 1,5/5-ST-3,81 KMGY

Connector View:

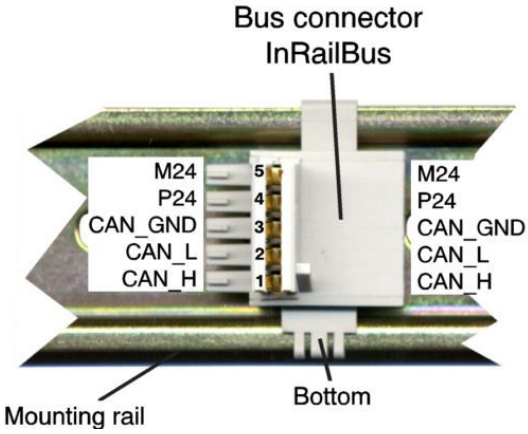

Pin Assignment:

Pin	Signal
5	M24 (GND)
4	P24 (+24 V)
3	CAN_GND
2	CAN_L
1	CAN_H
S	FE (PE_GND)

Signal Description:

CAN_L,
CAN_H ... CAN signals
CAN_GND ... reference potential of the local CAN-Physical layers
P24... power supply voltage +24 V ±10 %
M24... reference potential
FE... functional earth contact (EMC) (connected to mounting rail potential)

8.2 Using InRailBus (Option)

INFORMATION
This chapter describes the installation of the module using InRailBus for CAN-CBX-modules. For the CAN-PN module the following points apply accordingly.

8.3 Installation of the Module Using InRailBus-Connector

If the CAN bus signals and the power supply voltage shall be fed via the InRailBus, please proceed as follows:

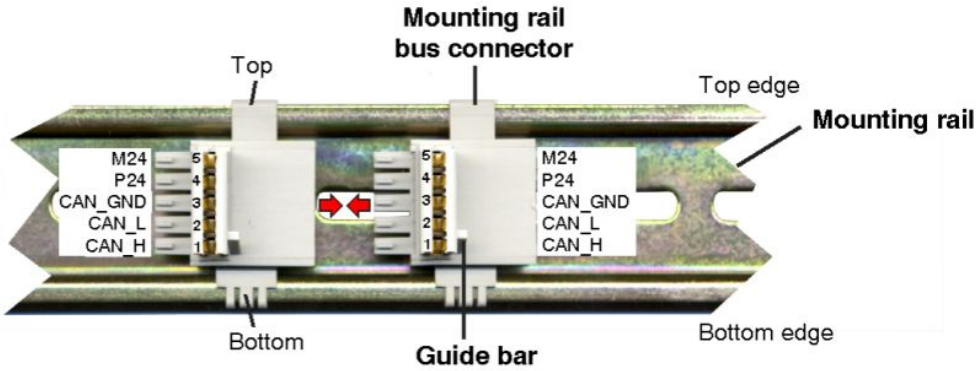

Figure. 12: Mounting rail with bus connector

1. Position the InRailBus connector on the mounting rail and snap it onto the mounting rail using slight pressure. Plug the bus connectors together to contact the communication and power signals (in parallel with one). The bus connectors can be plugged together before or after mounting the CAN-CBX modules.

2. Place the CAN-CBX module with the DIN rail guideway on the top edge of the mounting rail.

Figure. 13: Mounting CAN-CBX modules

3. Swivel the CAN-CBX module onto the mounting rail in pressing the module downwards according to the arrow as shown in figure 13. The housing is mechanically guided by the DIN rail bus connector.

4. When mounting the CAN-CBX module the metal foot catch snaps on the bottom edge of the mounting rail. Now the module is mounted on the mounting rail and connected to the InRailBus via the bus connector. Connect the bus connectors and the InRailBus, if not already done.

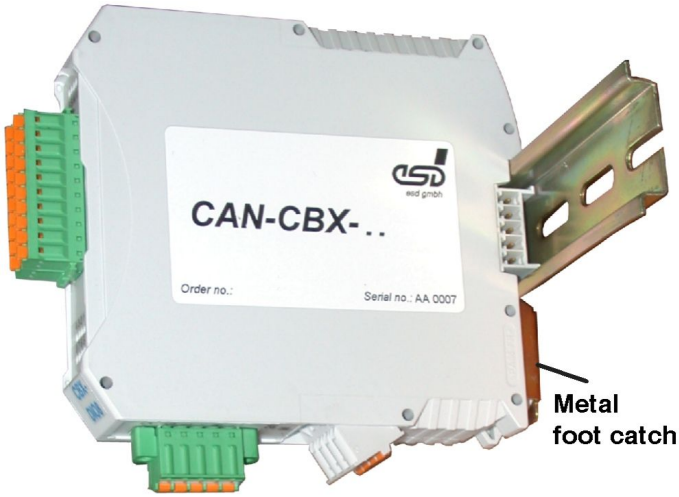

Figure. 14: Mounted CAN-CBX module

8.3.1 Connecting Power Supply and CAN Signals to CBX-InRailBus

To connect the power supply and the CAN-signals via the InRailBus, a terminal plug (order no.: C.3000.02) is needed. The terminal plug is not included in delivery and must be ordered separately (see order information).

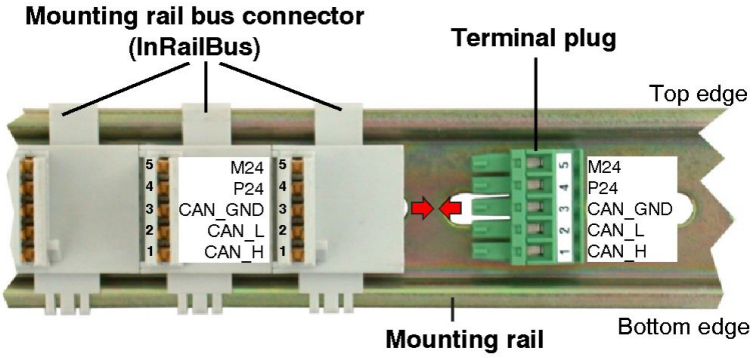

Figure. 15: Mounting rail with InRailBus and terminal plug

Plug the terminal plug into the socket on the right of the mounting-rail bus connector of the InRailBus, as described in Figure 15. Then connect the CAN interface and the power supply voltage via the terminal plug.

8.3.2 Connection of the Power Supply Voltage

NOTICE
It is **not permissible** to feed through the power supply voltage through the CBX station and to supply it to another CBX station via 24V connector! A feed through of the +24 V power supply voltage can cause damage on the CBX modules.

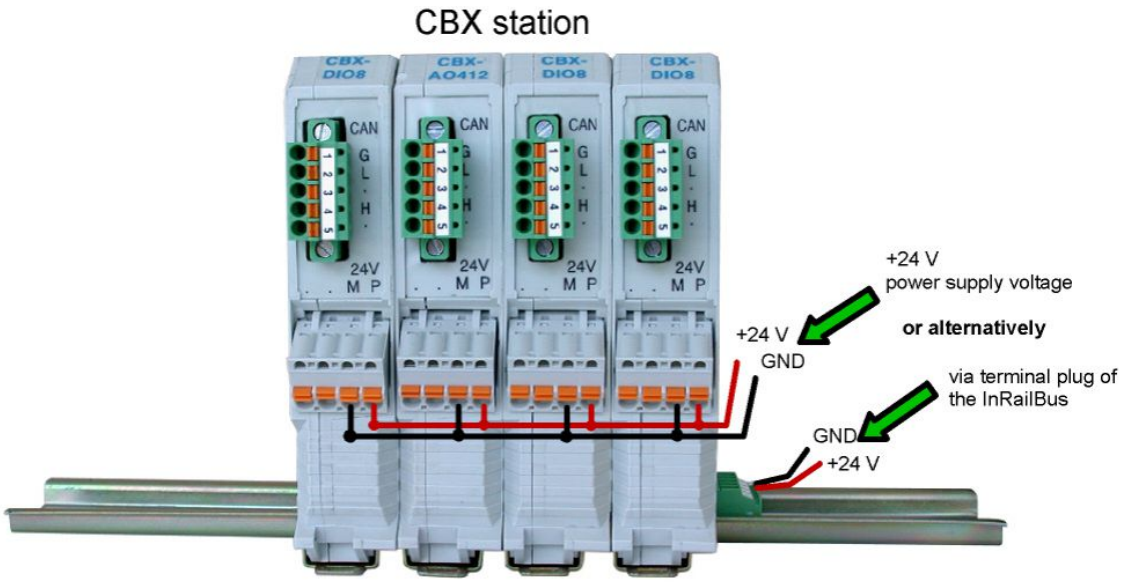

Figure. 16: Connecting the power supply voltage to the CAN-CBX station

8.3.3 Connection of CAN

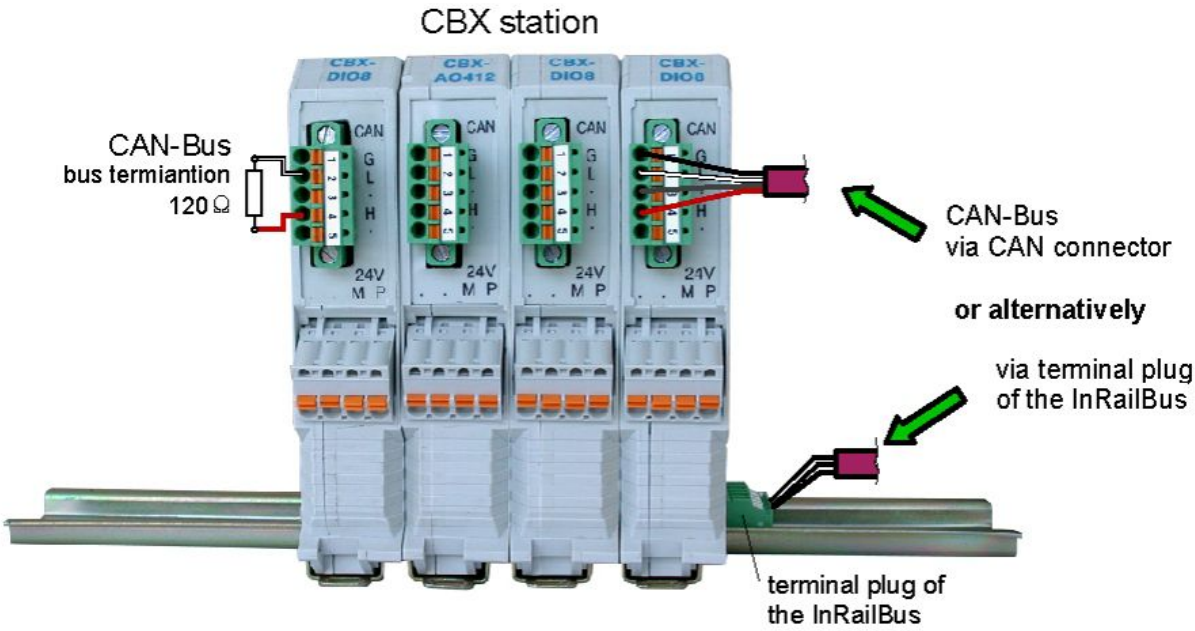

Figure. 17: Connecting the CAN signals to the CAN-CBX station

Generally the CAN signals can be fed via the CAN connector of the first CAN-CBX module of the CBX station. The signals are then connected through the CAN-CBX station via the InRailBus. To lead through the CAN signals the CAN bus connector of the last CAN-CBX module of the CAN-CBX station has to be used. The CAN connectors of the CAN-CBX modules which are not at the ends of the CAN-CBX station must not be connected to the CAN bus, because this would cause incorrect branching.
A bus termination must be connected to the CAN connector of the CAN-CBX module at the end of the CBX-InRailBus (see Fig. 17), if the CAN bus ends there.

8.4 Removal of the CAN-CBX Module from InRailBus

If the CAN-CBX module is connected to the InRailBus please proceed as follows:

Release the module from the mounting rail in moving the foot catch (see Fig. 14) downwards (e.g. with a screwdriver). Now the module is detached from the bottom edge of the mounting rail and can be removed.

INFORMATION
It is possible to remove individual devices from the whole without interrupting the InRailBus connection, because the contact chain will not be interrupted.

9. Declaration of Conformity and PNO Certificate

EU-KONFORMITÄTSERKLÄRUNG
EU DECLARATION OF CONFORMITY

Adresse / *Address*
esd electronics gmbh
Vahrenwalder Str. 207
30165 Hannover
Germany

esd erklärt, dass das Produkt
esd declares, that the product
CAN-PN

Typ, Modell, Artikel-Nr.
Type, Model, Article No.
C.2920.02

die Anforderungen der Normen
fulfills the requirements of the standards
EN 61000-6-2:2005,
EN 61000-6-4:2007/A1:2011

gemäß folgendem Prüfbericht erfüllt.
according to test certificate.
H-K00-0322-08

Das Produkt entspricht damit der EU-Richtlinie „EMV"
Therefore the product conforms to the EU Directive 'EMC'
2014/30/EU

Das Produkt entspricht den EU-Richtlinien „RoHS"
The product conforms to the EU Directives 'RoHS'
2011/65/EU, 2015/863/EU

Diese Erklärung verliert ihre Gültigkeit, wenn das Produkt nicht den Herstellerunterlagen entsprechend eingesetzt und betrieben wird, oder das Produkt abweichend modifiziert wird.
This declaration loses its validity if the product is not used or run according to the manufacturer's documentation or if non-compliant modifications are made.

Name / *Name* T. Bielert
Funktion / *Title* QM-Beauftragter / *QM Representative*
Datum / *Date* Hannover, 2019-12-09

Rechtsgültige Unterschrift / *authorized signature*

I:\Texte\Doku\MANUALS\CAN\CAN-PN\Konformitätserklärung\EG-Konformitaetserklaerung_CAN-PN_2019-12-09.odt

Certificate

PROFIBUS Nutzerorganisation e.V. grants to

esd electronics gmbh
Vahrenwalder Str. 207, 30165 Hannover, Germany

the Certificate No: **Z10129** for the PROFINET IO Device:

Model Name:	CAN-PN
Revision:	SW/FW: 2.1.1; HW: 130
Identnumber:	0x015D; 0x0001
GSD:	GSDML-V2.3-esd-CANPNIO-20131122.XML
DAP:	CAN Bus: CAN-PN, 0x10000000

This certificate confirms that the product has successfully passed the certification tests with the following PROFINET scope:

☑	Hardware	Auto_Negotiation, Auto_Polarity, Auto_Crossover
☑	Conformance Class B	RT_CLASS_1, RTA, LLDP, SNMP, MIB-II, LLDP-MIB

Test Report Number:	PN251-1
Authorized Test Laboratory:	SIEMENS, Fürth, Germany

The tests were executed in accordance with the following documents:
"Test Specifications for PROFINET IO devices, Version 2.2.4 from December 2010" and
"Test Cases for PN-Tester for PROFINET IO devices, Version 2.2.4.16.21".
This certificate is granted according to the document:
"Framework for testing and certification of PROFIBUS and PROFINET products".
For all products that are placed in circulation by **November 26, 2025** the certificate is valid for life.

Karlsruhe, January 12, 2023

(Official in Charge)

Board of PROFIBUS Nutzerorganisation e. V.

(Karsten Schneider)

(Frank Moritz)

10. Order Information

Type	Properties	Order No.
CAN-PN	PROFINET IO / CAN Gateway, CAN 2.0A/B (11/29-Bit CAN-ID), GSD file	C.2920.02

Accessories		Order No.
 CAN-CBX-TBUS	Mounting-rail bus connector of the CBX-InRailBus for CAN-CBX modules	C.3000.01
 CAN-CBX-TBUS-Connector	Terminal plug of the CBX-InRailBus for the connection of the +24V power supply voltage and the CAN interface Female type	C.3000.02
 CAN-CBX-TBUS-Connection adapter	Terninal plug of the CBX-InRailBus for the connection of the +24V power supply voltage and the CAN-Interface Male type	C.3000.03

Table 9: Order information

PDF Manuals
Manuals are available in English and usually in German as well. For availability of English manuals see table below.
Please download the manuals as PDF documents from our esd website www.esd.eu for free.

Manuals		Order No.
CAN-PN-ME	CAN-PN Manual in English (Hardware and Software Manual)	C.2920.21

Table 10: Available manuals

Printed Manuals
If you need a printout of the manual additionally, please contact our sales team: sales@esd.eu for a quotation. Printed manuals may be ordered for a fee.