CAN-CBX-AIR/2

Wireless CAN-Bridge with USB Interface

Hardware Manual

to Product C.3051.02, C.3051.04

esd electronic system design gmbh
Vahrenwalder Str. 207 • 30165 Hannover • Germany
http://www.esd.eu
Phone: +49 (0) 511 3 72 98-0 • Fax: +49 (0) 511 3 72 98-68

N O T E

The information in this document has been carefully checked and is believed to be entirely reliable. **esd** makes no warranty of any kind with regard to the material in this document, and assumes no responsibility for any errors that may appear in this document. In particular descriptions and technical data specified in this document may not be constituted to be guaranteed product features in any legal sense.

esd reserves the right to make changes without notice to this, or any of its products, to improve reliability, performance or design.

All rights to this documentation are reserved by **esd**. Distribution to third parties, and reproduction of this document in any form, whole or in part, are subject to **esd**'s written approval**.**
© 2013 esd electronic system design gmbh, Hannover

esd electronic system design gmbh
Vahrenwalder Str. 207
30165 Hannover
Germany

Phone:	+49-511-372 98-0
Fax:	+49-511-372 98-68
E-Mail:	info@esd.eu
Internet:	www.esd.eu

Trademark Notices

CANopen® and CiA® are registered community trademarks of CAN in Automation e.V.
Windows® is a registered trademark of Microsoft Corporation in the United States and other countries.
Linux® is the registered trademark of Linus Torvalds in the United States and/or other countries.

All other trademarks, product names, company names or company logos used in this manual are reserved by their respective owners.

Document file:	I:\Texte\Doku\MANUALS\CAN\CBX\CAN-CBX-AIR2\Englisch\CAN-CBX-AIR2_Hardware-Manual_en_10.odt
Date of print:	2013-05-30
Document type number:	DOC0800

Hardware version:	1.0

Document History

The changes in the document listed below affect changes in the hardware as well as changes in the description of the facts, only.

Revision	Chapter	Changes versus previous version	Date
1.0	-	First English Version	2013-05-30

Technical details are subject to change without further notice.

Safety Instructions

- When working with CAN-CBX-AIR/2 follow the instructions below and read the manual carefully to protect yourself from injury and the CAN-CBX-AIR/2 from damage.
- Do not open the housing of the CAN-CBX-AIR/2.
- The permitted operating position is specified as shown (Figure: 7). Other operating positions are not allowed.
- Never let liquids get inside the CAN-CBX-AIR/2. Otherwise, electric shocks or short circuits may result.
- Protect the CAN-CBX-AIR/2 from dust, moisture and steam.
- Protect the CAN-CBX-AIR/2 from shocks and vibrations.
- The CAN-CBX-AIR/2 may become warm during normal use. Always allow adequate ventilation around the CAN-CBX-AIR/2 and use care when handling.
- Do not operate the CAN-CBX-AIR/2 adjacent to heat sources and do not expose it to unnecessary thermal radiation. Ensure an ambient temperature as specified in the technical data.
- Do not use damaged or defective cables to connect the CAN-CBX-AIR/2 and follow the CAN wiring hints in chapter: "Correctly Wiring Electrically Isolated CAN Networks".
- In case of damages to the device, which might affect safety, appropriate and immediate measures must be taken, that exclude an endangerment of persons and objects.
- Current circuits which are connected to the device have to be sufficiently protected against hazardous voltage (SELV according to EN 60950-1).
- Device of protection class III
  The CAN-CBX-AIR/2 may only be driven by power supply current circuits, that are contact protected. A power supply, that provides a safety extra-low voltage (SELV or PELV) according to EN 60950-1, complies with this conditions. Functional earthing is allowed, but must not conflict with the safety considerations of the system.

Qualified Personal
This documentation is directed exclusively towards personal qualified in control and automation engineering. The installation and commissioning of the product may only be carried out by qualified personal, which is authorized to put devices, systems and electric circuits into operation according to the applicable national standards of safety engineering.

Conformity
The CAN-CBX-AIR/2 meets the demands of the EU regulations and EMC standards printed in the conformity declaration at the end of this manual.

Intended Use
The intended use of the CAN-CBX-AIR/2 is the operation as wireless CAN Bridge with USB interface.
The guarantee given by esd does not cover damages which result from improper use, usage not in accordance with regulations or disregard of safety instructions and warnings.

- The CAN-CBX-AIR/2 is intended for top hat rail mounting.
- The operation of the CAN-CBX-AIR/2 in hazardous areas, or areas exposed to potentially explosive materials is not permitted.
- The operation of the CAN-CBX-AIR/2 for medical purposes is prohibited.

Service Note
The CAN-CBX-AIR/2 does not contain any parts that require maintenance by the user. The CAN-CBX-AIR/2 does not require any manual configuration of the hardware. Unauthorized intervention in the device voids warranty claims.

Disposal
Devices which have become defective in the long run have to be disposed in an appropriate way or have to be returned to the manufacturer for proper disposal. Please, make a contribution to environmental protection.

Table of contents

1. Overview

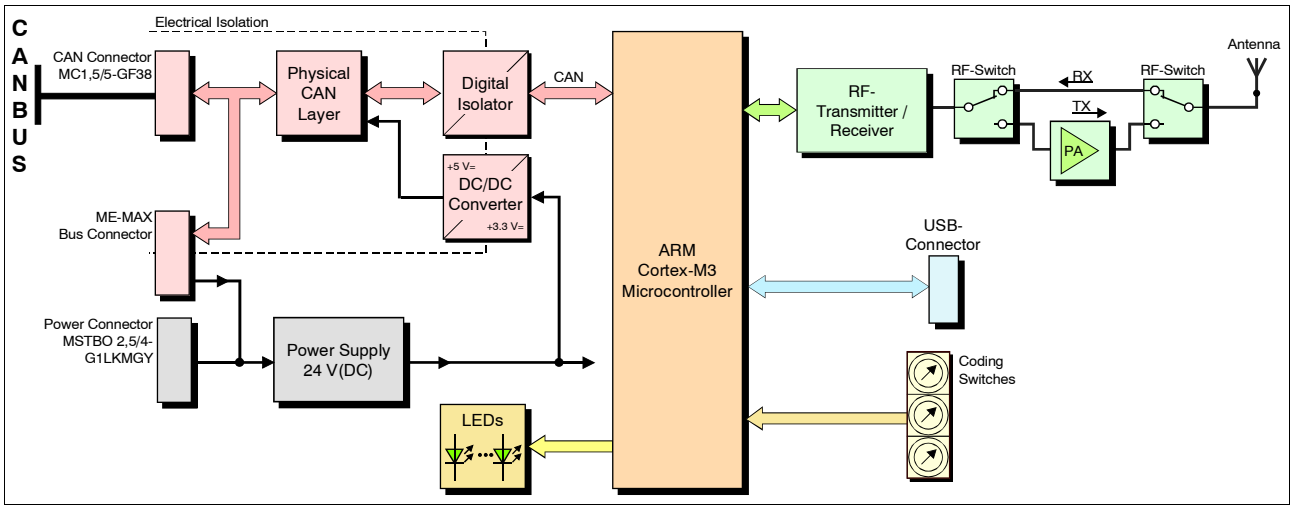

Figure 1: Block circuit diagram

The CAN-CBX-AIR/2 is designed for wireless bridging two different CAN networks via a radio link. It supports data exchange between CAN nets with two different baud rates. This stand-alone mode can be used e.g. to get access to CAN modules installed at turning machine parts via a point-to-point connection (see example1, page 24).

Today's most common PC interface USB is used to configure CAN-CBX-AIR/2. But beside this - CAN-CBX-AIR/2 enables a PC to transmit and receive CAN data via USB and CAN-CBX-AIR/2 into and from a distant CAN-CBX-AIR/2 for e.g. service and maintenance (see example 2, page 24).

The CAN interface is designed according to ISO11898 with electrical isolation and bit rates up to 1 Mbit/s.

Four LEDs indicate the state of the module's interfaces.

CAN-CBX-AIR/2 comes with an easy to use Windows®-based configuration tool. All settings will be stored within the device.
Access via esd's ntcan API is supported.

The power supply voltage and the CAN bus signals can be fed via separate connectors or via the InRailBus connector.

1.1 Scope of Delivery

1.1.1 CAN-CBX-AIR/2

The following articles are included in delivery of CAN-CBX-AIR/2 (esd order no.: C.2051.02):
- 1x CAN-CBX-AIR/2 module
- 24V power supply connector
- CAN line connector
- 2,4 GHz antenna with antenna cable
- USB cable (1m)

1.1.2 CAN-CBX-AIR/2-Bridge

The scope of delivery of the CAN-CBX-AIR/2-Bridge (esd order no.: C.2051.04) contains:
- 2x CAN-CBX-AIR/2 (esd order no.: C.2051.02, as described above)
- 1x CAN-DRV-CD CD-ROM with CAN drivers and documentation for Windows® and Linux® - CAN drivers, demo programs and SDK- documentation and manuals

2. Connecting Diagram

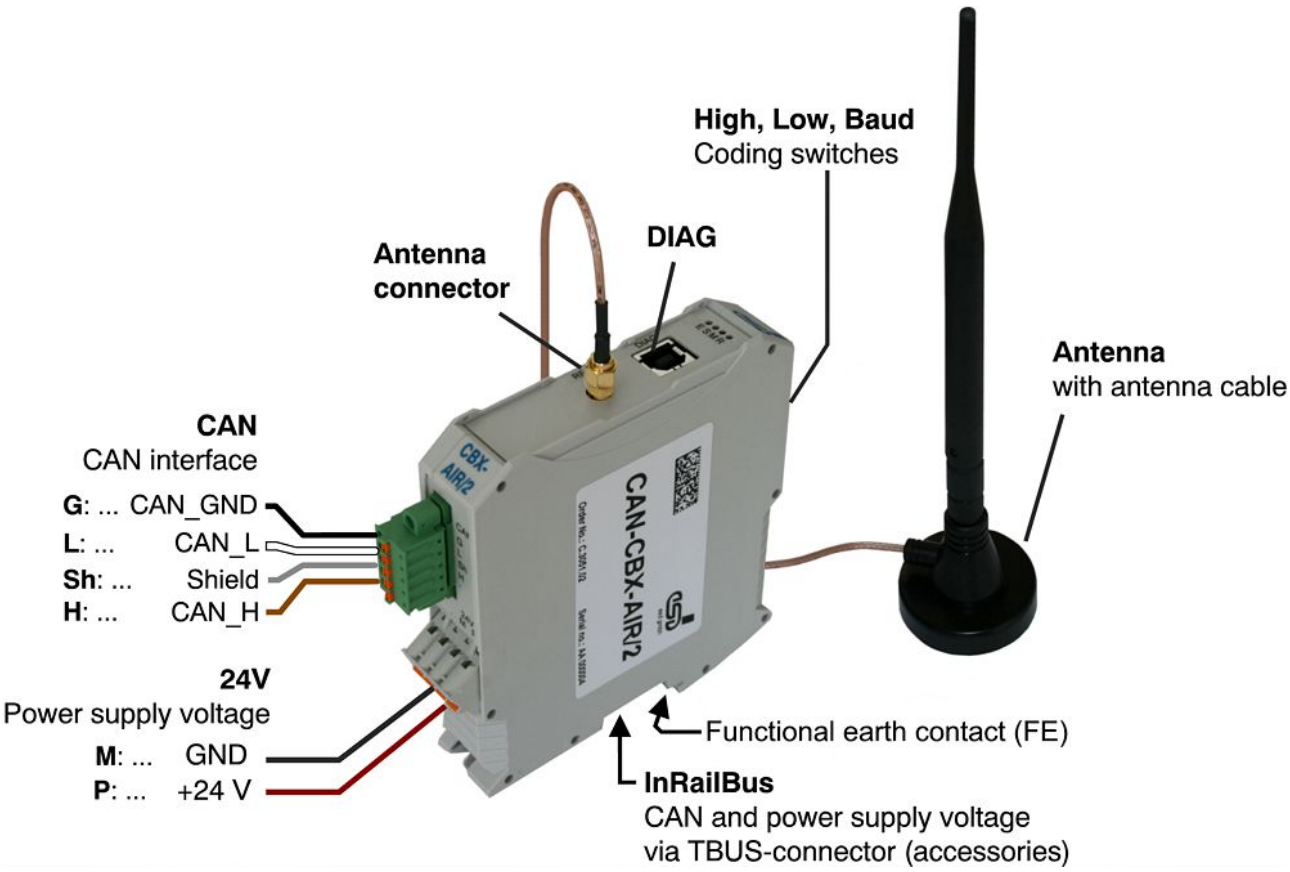

Figure 2: Connecting diagram of CAN-CBX-AIR/2

See also page 37 et. seqq. for signal assignment of the connectors.

Please pay attention to the connection conditions of the individual interfaces.

3. LEDs

3.1 Position of the LEDS

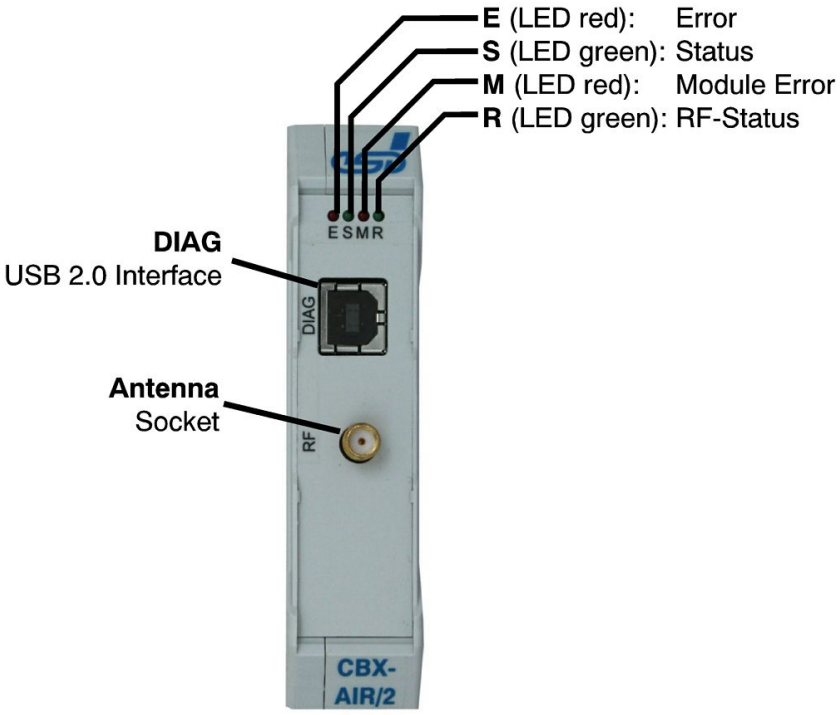

Figure 3: Connectors and LEDs

3.2 LED Indication

3.2.1 Indicator States

In principle there are the following indicator states:

Indicator State	Display
on	LED constantly on
off	LED constantly off
blinking	LED blinking with a frequency of approx. 2.5 Hz
flickering	LED blinking with a frequency of approx. 10 Hz
1 flash	LED 200 ms on, 1000 ms off
2 flashes	LED 200 ms on, 200 ms off, 200 ms on, 1000 ms off

Table 1: Indicator states

3.2.2 Operation of the Error LED

LED	Colour	Function	Indicator State	Description	LED name in schematic diagram
E	red	Error	off	no error	LED1A
			on	CAN controller state is *Bus Off*	
			1 flash	Warning limit reached - At least one of the error counters of the CAN controller has reached or exceeded the warning level (too many error frames)	

Table 2: Description of the Error LED

3.2.3 Operation of the Status LED

LED	Colour	Function	Indicator State	Description	LED name in schematic diagram
S	green	Status	on	the LED is permanently on, the device is in transparent mode (code address 00)	LED1B

Table 3: Description of Status LEDs

3.2.4 Operation of the Module Error LED

LED	Colour	Function	Indicator State	Description	LED name in schematic diagram
M	red	Module Errror	off	no module error	LED1B
			blinking	an RF data packet has to be retransmitted	

Table 4: Description of Module Error LEDs

3.2.5 Operation of the RF-Status LED

LED	Colour	Function	Indicator State	Description	LED name in schematic diagram
R	green	RF-Status	off	RF transmitter is off	LED1B
			on	RF transmitter is transmitting a data packet	

Table 5: Description of RF-Status LED

Note:
As the module constantly switches between RX and TX, the RF-Status LED is usually noticed as "flickering".

4. Hardware Configuration

4.1 Coding Switches

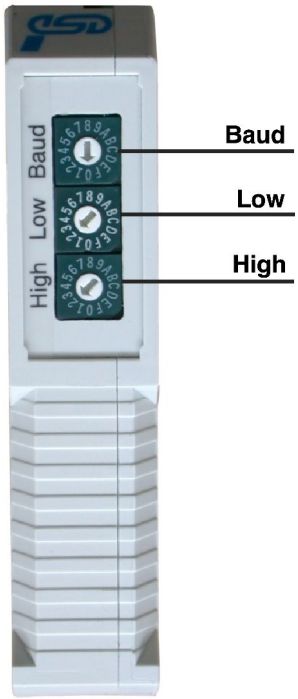

Figure 4: Position of the coding switches

4.1.1 Setting the Node-ID via Coding Switch

Note:
At the moment the address is set to 00. The module acts as transparent bridge (no CANopen), configurable by the configuration tool.

The CANopen mode will be available with firmware update.

4.1.2 Setting the Baud Rate

The baud rate can be set with the coding switch Baud.

Values from 0_h to F_h can be set via the coding switch. The values of the baud rate can be taken from the following table:

Setting [Hex]	Baud rate [Kbits/s]
0	1000
1	666.6
2	500
3	333.3
4	250
5	166
6	125
7	100
8	66.6
9	50
A	33.3
B	20
C	12.5
D	10
E	800
F	baud rate set by configuration tool

Table 6: Index of the baud rate

5. Hardware Installation

To put the CAN-CBX-AIR/2 into operation, please follow the installation notes.

Step	Procedure	see page
⚠	**Read the safety instructions at the beginning of this document carefully before you start with the hardware installation!**	4
⚠	**Attention:** **Device of protection class III** The CAN-CBX-AIR/2 may only be driven by power supply current circuits, that are contact protected. A power supply, that provides a safety extra-low voltage (SELV or PELV) according to EN 60950-1, complies with this conditions. Functional earthing is allowed, but must not conflict with the safety considerations of the system.	
1.	Mount the CAN-CBX-AIR/2 module. If you use the InRailBus, see the following chapter.	15
⚠	**Attention:** The CAN-CBX-AIR/2 must be supplied by a limited current source (see chapter 8.1)!	
2.	Connect the interfaces (power supply voltage, CAN, DIAG, Antenna) as described in the connecting diagram. **Do not remove the antenna during operation!**	9
3.	Please note that the CAN bus has to be terminated at both ends! **esd** offers special T-connectors and termination connectors. Additionally the CAN_GND signal has to be connected to earth at **exactly one** point in the CAN network. Therefore the CAN termination connectors offered by esd have got a grounding contact. A CAN participant with a CAN interface which is not electrically isolated corresponds to the grounding of the CAN-GND.	
4.	Set the baud rate (only if another baud rate than the default baud rate is requested.) The default baud rate is 1 MBit/s. The baud rate can be configured via the coding switch BAUD, as described in chapter: “Setting the Baud Rate”.	13

5.1 Using InRailBus

5.1.1 Installation of the Module Using InRailBus Connector

If the CAN bus signals and the power supply voltage shall be fed via the InRailBus, please proceed as follows:

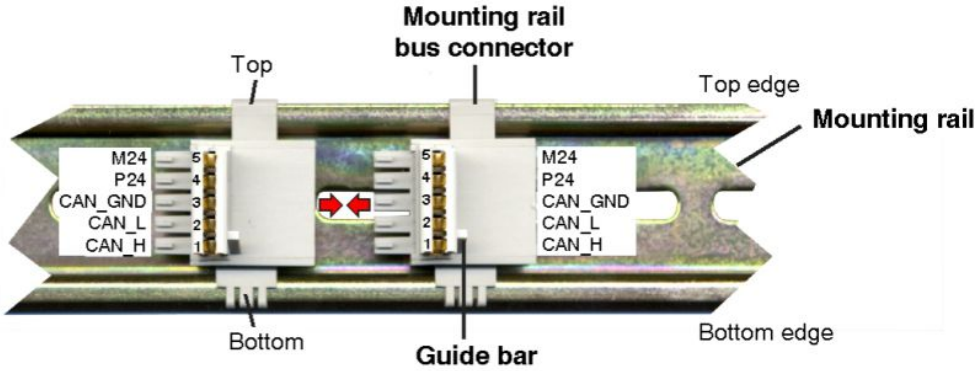

Figure 5: Mounting rail with bus connector

1. Position the InRailBus connector on the mounting rail and snap it onto the mounting rail using slight pressure. Plug the bus connectors together to contact the communication and power signals (in parallel). The bus connectors can be plugged together before or after mounting the CAN-CBX modules.

2. Place the CAN-CBX module with the DIN rail guideway on the top edge of the mounting rail.

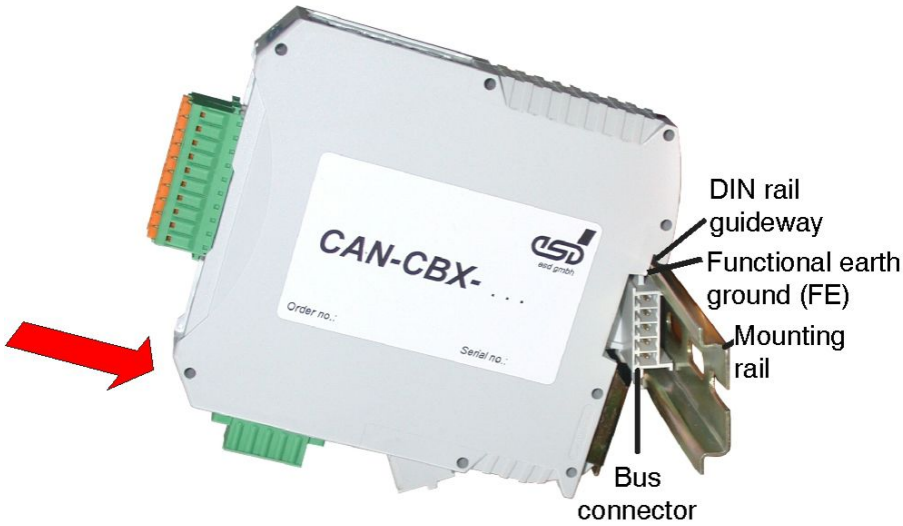

Figure 6: Mounting CAN-CBX modules

3. Swivel the CAN-CBX module onto the mounting rail by pressing the module downwards according to the arrow as shown in figure 6. The housing is mechanically guided by the DIN rail bus connector.

4. When mounting the CAN-CBX module, the metal foot catch snaps on the bottom edge of the mounting rail. Now the module is mounted on the mounting rail and connected to the InRailBus via the bus connector. Connect the bus connectors and the InRailBus, if not already done.

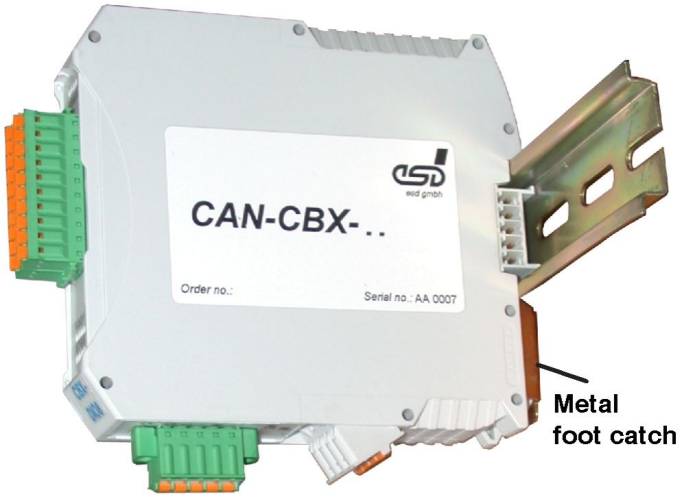

Figure 7: Mounted CAN-CBX module

5.1.2 Connecting Power Supply and CAN Signals to CBX-InRailBus

To connect the power supply and the CAN-signals via the InRailBus, a terminal plug is needed. The terminal plug is not included in delivery and must be ordered separately (order no.: C.3000.02, see order information for InRailBus Accessories, page 53).

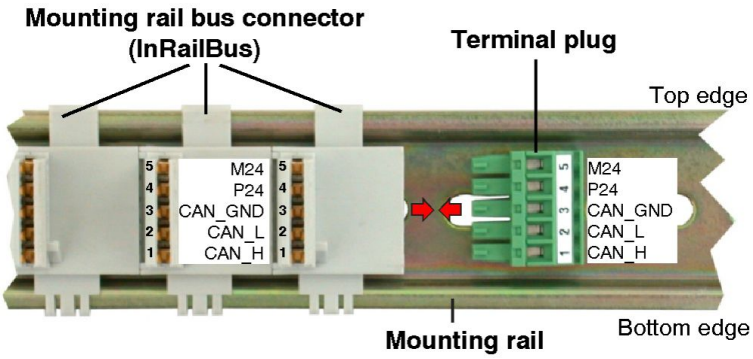

Figure 8: Mounting rail with InRailBus and terminal plug

Plug the terminal plug into the socket on the right of the mounting-rail bus connector of the InRailBus, as described in Figure 5. Then connect the CAN interface and the power supply voltage via the terminal plug.

5.1.3 Connection of the Power Supply Voltage

The power supply voltage can be connected via the +24V connector for the power supply voltage or via InRailBus connector.

Attention:
Please note the safety instructions and requirements concerning the supply current circuit (see page 4 and 35).

Attention:
The connections for the 24V power supply are internally connected and must not be supplied by two independent current sources at once!

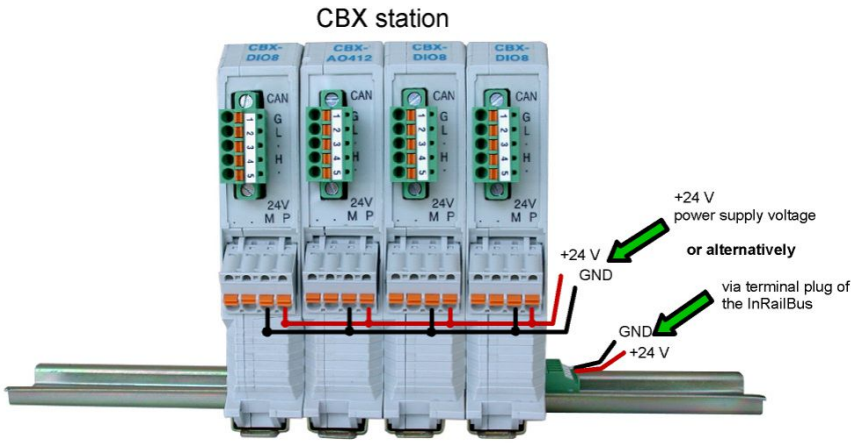

Figure 9: Connecting the power supply voltage to the CAN-CBX station

5.1.4 Connection of CAN

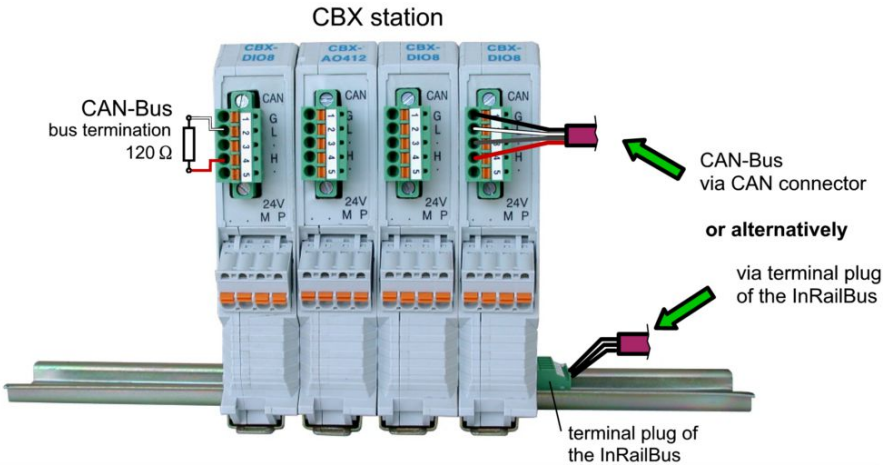

Figure 10: Connecting the CAN signals to the CAN-CBX station

Generally the CAN signals can be fed via the CAN connector of the first CAN-CBX module of the CBX station. The signals are then connected through the CAN-CBX station via the InRailBus. To lead through the CAN signals the CAN bus connector of the last CAN-CBX module of the CAN-

CBX station has to be used. The CAN connectors of the CAN-CBX modules which are not at the ends of the CAN-CBX station must not be connected to the CAN bus, because this would cause incorrect branching.
A bus termination must be connected to the CAN connector of the CAN-CBX module at the end of the CBX-InRailBus (see Figure 8), if the CAN bus ends there.

5.2 Remove the CAN-CBX Module from InRailBus

If the CAN-CBX module is connected to the InRailBus please proceed as follows:

Release the module from the mounting rail in moving the foot catch (see Figure 7) downwards (e.g. with a screwdriver). Now the module is detached from the bottom edge of the mounting rail and can be removed.

Note:
It is possible to remove individual devices from the whole without interrupting the InRailBus connection, because the contact chain will not be interrupted.

6. Software Configuration

Note:
Access via esd's ntcan API is supported.
The software installation via esd's ntcan API is described in the manual ‘CAN-API, Installation Guide’.

Installation procedure:

1. To install the CAN driver insert the CAN-CD into the drive of your PC.

2. Install the CAN driver.
   Depending on your PC's Windows operating system, the installation will be guided by different looking installation tools (*Found New Hardware* Wizard) if the device is connected to the PC via USB.

   Follow the instructions of the installation tool. For further information refer to the manual: 'CAN-API_Part2_Installation_Manual.pdf'.
   The PDF-file of the manual can be found on the CAN-CD in subdirectory:
   Documentation\English\Software_Documents\ CAN-API_Part2_Installation_Manual.pdf

3. End of driver installation

4. Use the Windows-based configuration tool to configure the CAN-CBX-AIR/2 modules for the application as described in the following chapter: "7. CAN-CBX-AIR/2 Configuration" of this manual. All settings will be stored within the device.

7. CAN-CBX-AIR/2 Configuration

Note:
The configuration program is designed to configure CAN-AIR/2 and CAN-CBX-AIR/2 modules.
Items described in this chapter as example for the CAN-AIR/2 module apply accordingly for the CAN-CBX-AIR/2.

It is possible to configure the operating mode, the CAN baud rate, RF-frequency (channel) as well as several CAN filter masks.

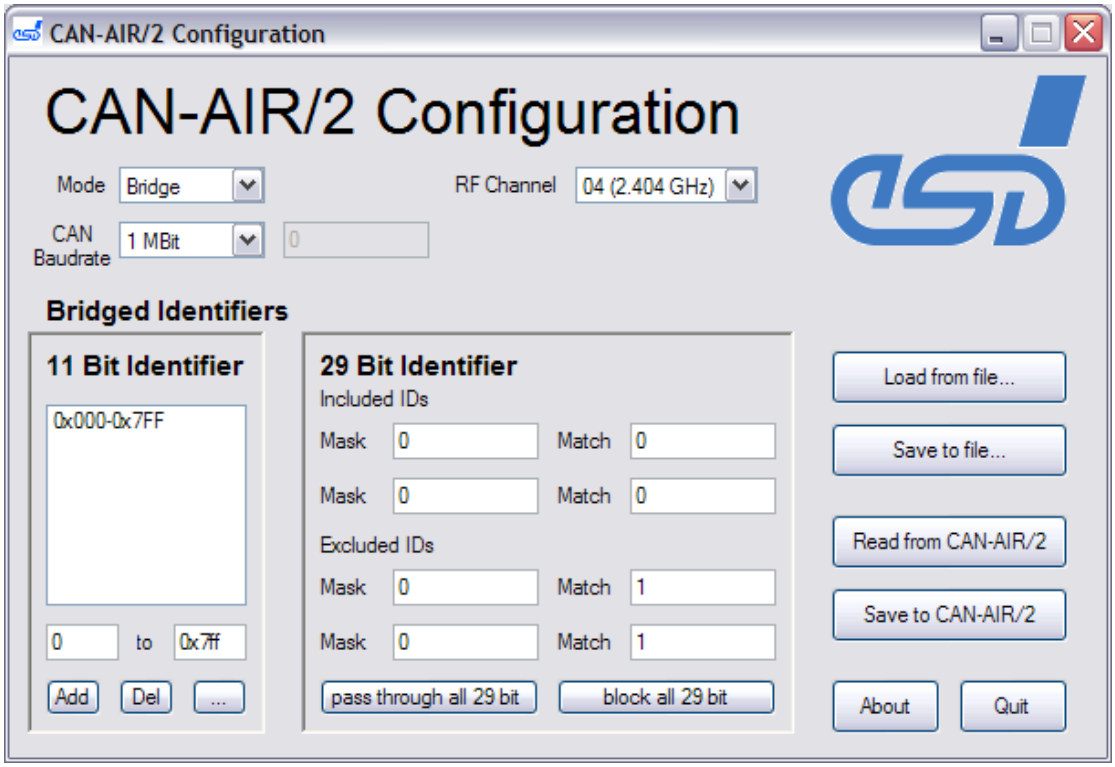

Figure 11: CAN-CBX-AIR/2 Configuration window

The configuration can be permanently stored in the CAN-CBX-AIR/2 memory.
It is also possible to save the configuration as a file on a PC and to open it again, e.g. to configure a second CAN-CBX-AIR/2 in the same way for bridge mode operation.

7.1 Default Setting

The factory default setting of the CAN-CBX-AIR/2 is (see Figure: 9):

Mode:	Bridge		
CAN Baudrate:	1 MBit/s		
RF Channel:	04 (2.404 GHz)		
Bridged Identifiers			
	11 Bit Identifier:	0x000 - 0x7FF	pass through all 11-bit IDs
	29 Bit Identifier:	pass through all 29-bit IDs:	
		Included IDs	
		Mask: 0	Match: 0
		Mask: 0	Match: 0
		Excluded IDs	
		Mask: 0	Match: 1
		Mask: 0	Match: 1

7.2 Configuration Window

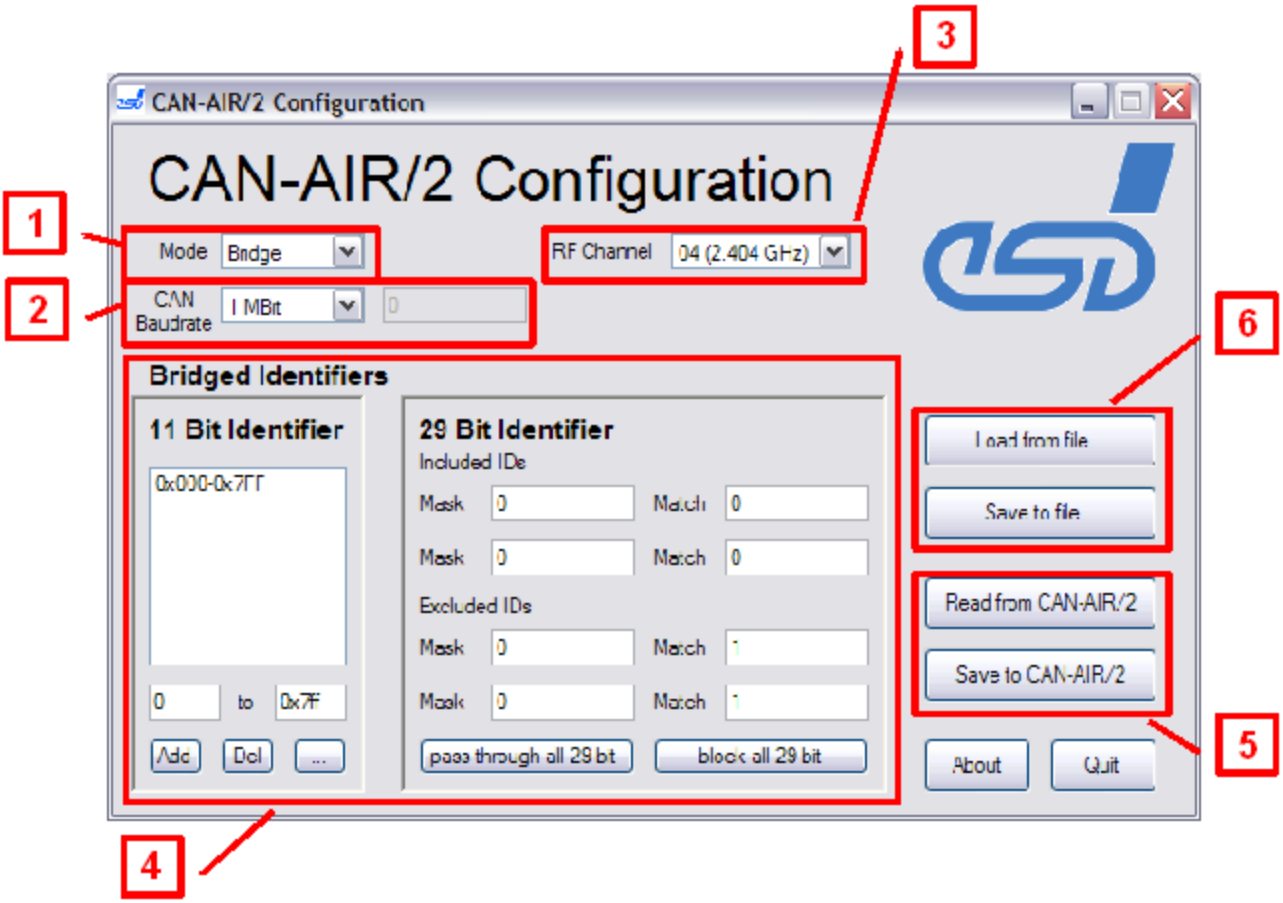

Figure 12: Description of the configuration window

	Chapter	Description
1	7.3	set CAN-CBX-AIR/2 Operating Mode
2	7.4	CAN-Baud rate setting
3	7.5	RF-Channel (Frequency) setting
4	7.6	CAN-Identifier Filter masks setting
5	7.7	Read and Save configuration of the CAN-CBX-AIR/2
6	7.8	Load and Save configuration file

If two CAN-CBX-AIR/2 modules should be operated in the "Bridge Mode", the CAN-CBX-AIR/2 modules need not be set to the same CAN baud rate, but of course to the same „RF Channel“.

7.3 Operating Mode Setting

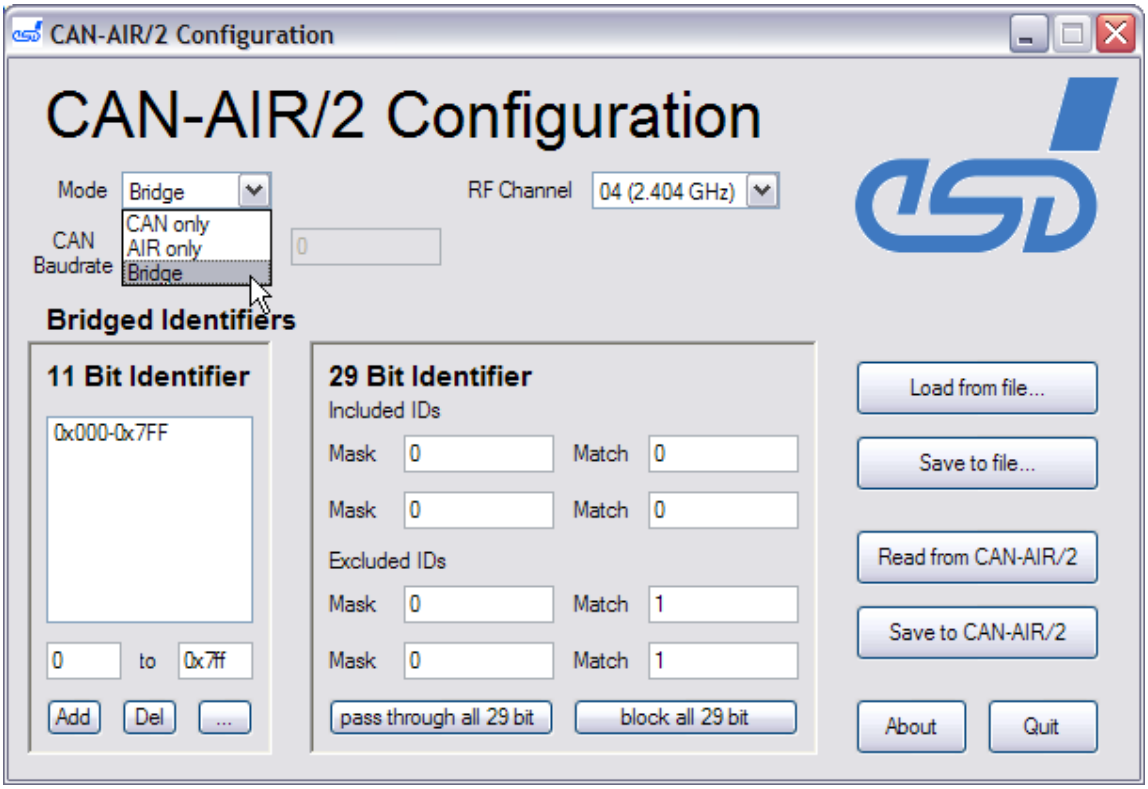

Figure 13: Operating mode

Select one of the three operating modes from the drop-down menu of *Mode*.

Mode	Description
CAN only	The **CAN-Interface is active**, operation similar to CAN-USB/2 is possible. **RF-Transmission is disabled**, communication with a 2nd CAN-CBX-AIR/2 e.g. as a Bridge is not possible.
AIR only	The **CAN-Interface is disabled.** Communication with a 2nd CAN-CBX-AIR/2 via RF transmission is possible.
Bridge	**CAN-Interface and RF-Transmission** are enabled (default).

Attention:
For the operation in 'CAN only' or 'AIR only' mode CAN driver of esd' ntcan API must be installed !

7.3.1 Mode-Example„Bridge“

Both CAN-CBX-AIR/2 have to be set to **"Bridge"** mode.
Both modules have to be set to the **same „RF Channel“** .
Setting of the CAN-baud rate can be different.

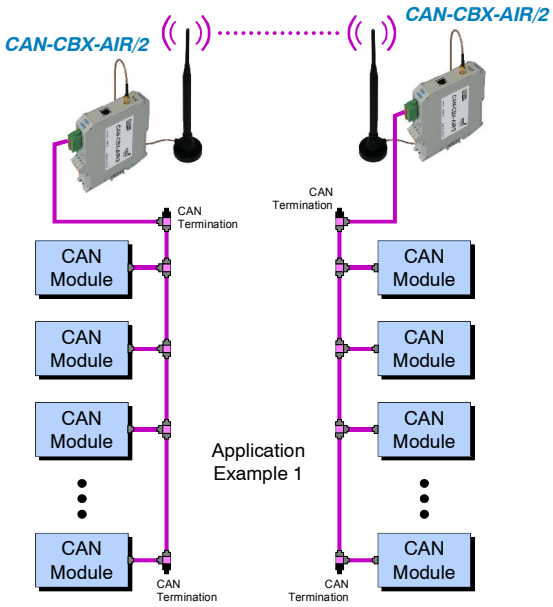

Figure 14: Example1, **"Bridge"** mode

7.3.2 Mode-Example„AIR only“

„RF Channel“ of both CAN-CBX-AIR/2 have to be set **to the same value.**

The left CAN-CBX-AIR/2 is set to **„Air only“** mode, as no other CAN node is connected to. CAN-baud rate settings are not effective.

The right CAN-CBX-AIR/2 is set to **„Bridge“**-mode. The CAN-baud rate has to be set to the same value as the other nodes on the CAN bus.

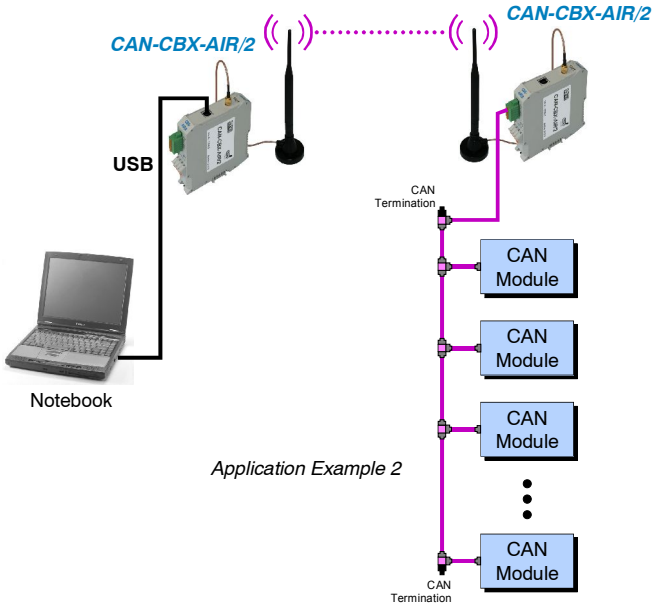

Figure 15: Example 2, **"AIR only"** mode

7.4 CAN Baud Rate Setting

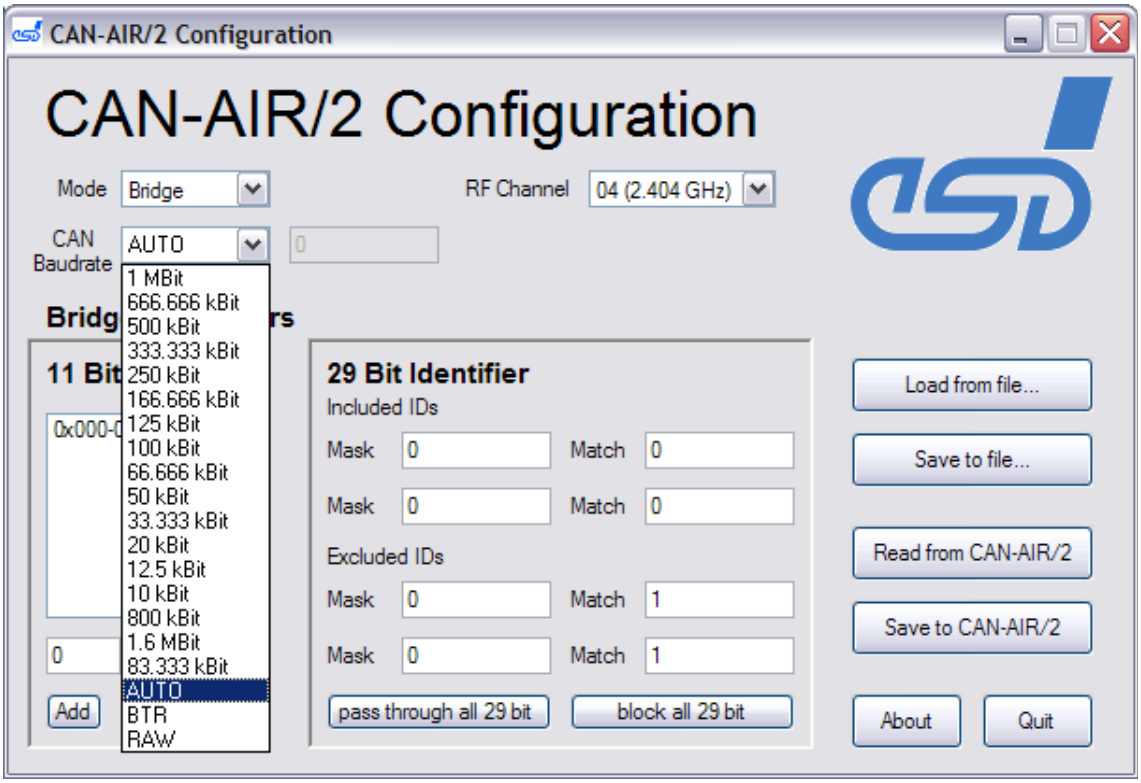

Figure 16: Setting CAN baud rate

The drop-down menu *CAN Baudrate* contains a choice of standard baud rates.
To set the baud rate of the CAN bus select an adequate baud rate. The *CAN Baudrate* has to be set to the same value as the other nodes on the CAN bus.
If two CAN-CBX-AIR/2 are operated in **"Bridge"**-mode both CAN-CBX-AIR/2 could be set to different CAN-baud rates.

It is also possible to set the baud rate by means of the BTR-register of the CAN-controller.

Attention:
In order to set the CAN baud rate by means of the BTR-register, detailed hardware knowledge of CAN-controller chip is necessary.

After selecting BTR from the drop-down list, the CAN baud rate can be entered in the input box as a decimal or hexadecimal value.
For hexadecimal values use '0x' or '$' as prefix.

With RAW you can specify any value which will be interpreted like the *baudrate* parameter in `canSetBaudrate` (see ntcan-API).
After selecting RAW from the drop-down-list, the CAN baud rate can be entered in the input box as a decimal or hexadecimal value.

For automatic baud rate detection choose AUTO in the drop-down-list.

7.5 RF-Channel Setting

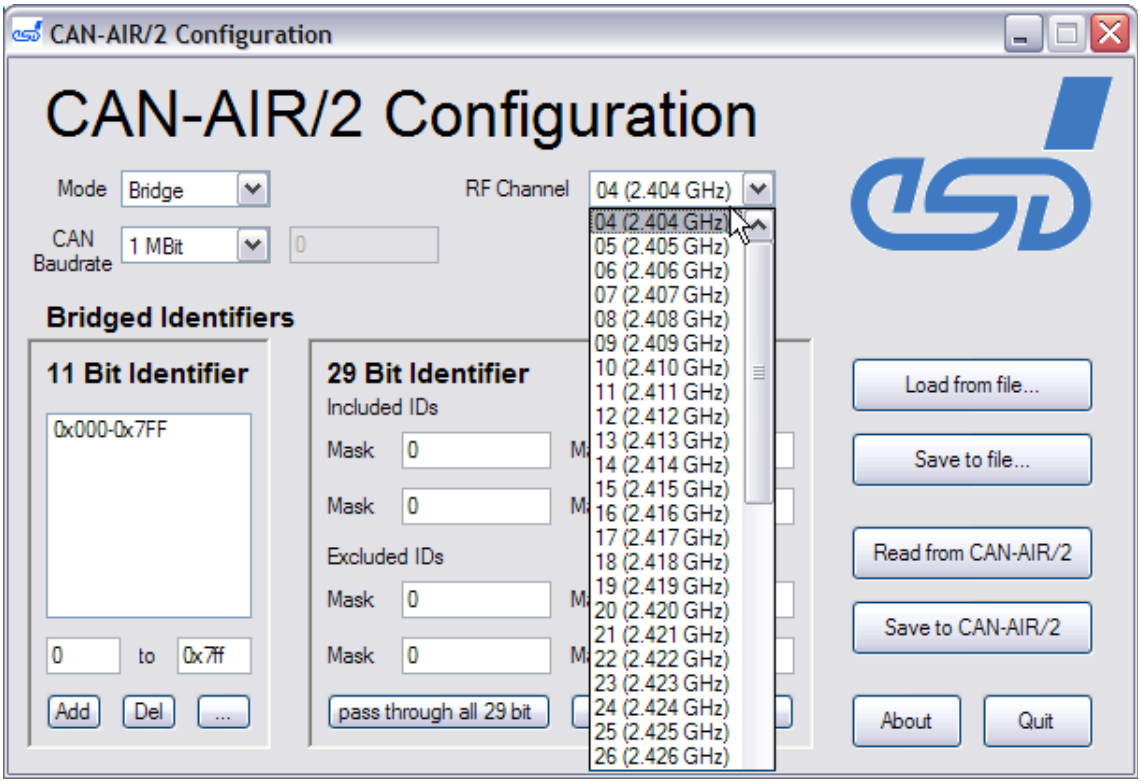

Figure 17: Setting RF-Channel

The RF channel for communication with the 2nd CAN-CBX-AIR/2 can be selected via *RF Channel.* The drop-down menu *RF Channel* contains a list of appropriate transmission channels from channel 04 (2.404 GHz) up to channel 79 (2.479 GHz).

Attention:
Both modules have to be set to the same RF channel, if not, no communication will be possible.

In the frequency range from 2,404 GHz (RF-channel 04) up to 2,479 GHz (RF-channel 79) the choice of 76 channels in steps of 1 MHz is possible. Because the CAN-CBX-AIR/2 occupies 2 MHz as the bandwidth, neighbouring channels cannot be used. The spacing between channels in use must be at least 2 MHz when using within the transmission range. A channel spacing of 4 MHz is not recommended, either.

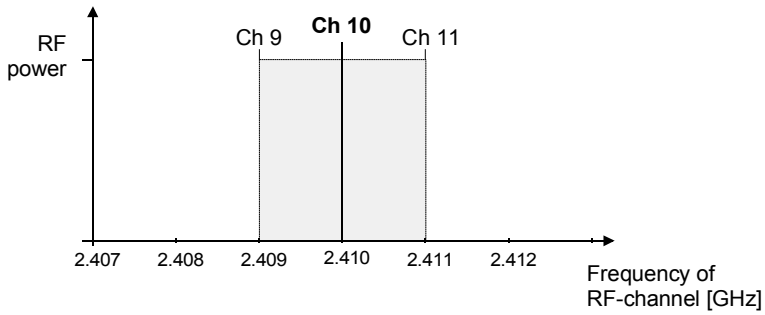

Figure 18: Example: Bandwidth of RF-Channel 10

For the RF-transmission CAN-CBX-AIR/2 uses the 2,4 GHz ISM-Band. This frequency range is also used for WLAN- (IEEE 802.11) and Bluetooth- (IEEE 802.15) services but with different RF channel assignments.
Direct communication with units of these other standards and the CAN-CBX-AIR/2 is not possible.
Due to limitation of the bandwidth of the ISM-band disturbances of communication in the transmission channels could occur by overlapping.

For the communication between two CAN-CBX-AIR/2 modules it is recommended to choose a free „RF channel“ or frequency which is not occupied by other RF standards in the same area.

Note:
The assignment of the WLAN channels according to IEEE 802.11 is shown in the following table.

WLAN channel	Frequency [GHz]	preferred channel acc. to
1	2,412	IEEE802.11 b/g
2	2,417	
3	2,422	IEEE802.11 n
4	2,427	
5	2,432	IEEE802.11 g
6	2,437	IEEE802.11 b
7	2,442	

WLAN Channel	Frequency [GHz]	preferred channel acc. to
8	2,447	
9	2,452	IEEE802.11 g
10	2,257	
11	2,462	IEEE802.11 b/n
12	2,467	
13	2,472	IEEE802.11 g
14	2,484	IEEE802.11 b

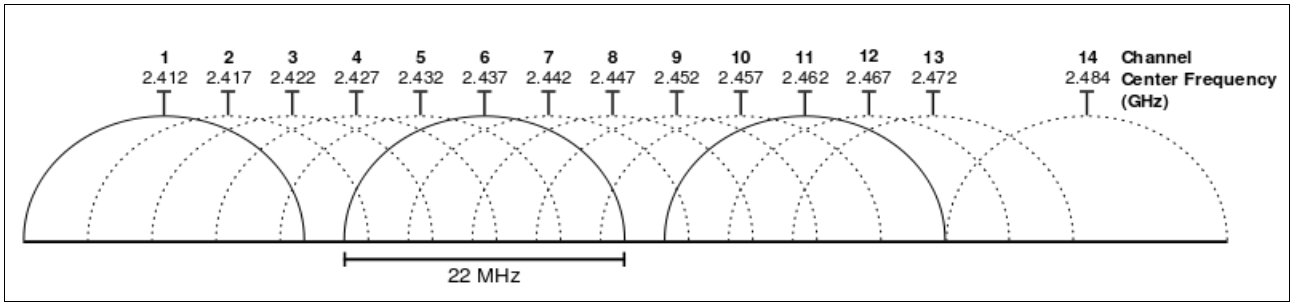

(Reference: http://en.wikipedia.org/wiki/IEEE_802.11, under licence of: http://creativecommons.org/licenses/by-sa/3.0/deed.en)

Figure 19: Bandwidth of the WLAN transmission according to protocol IEEE 802.11b

Please note that the bandwidth depends on the protocol used.

Protocol	Bandwidth [MHz]
IEEE 802.11b	22
IEEE 802.11g	20
IEEE 802.11n	40

7.6 CAN-Identifier Filtering and -Mask Setting

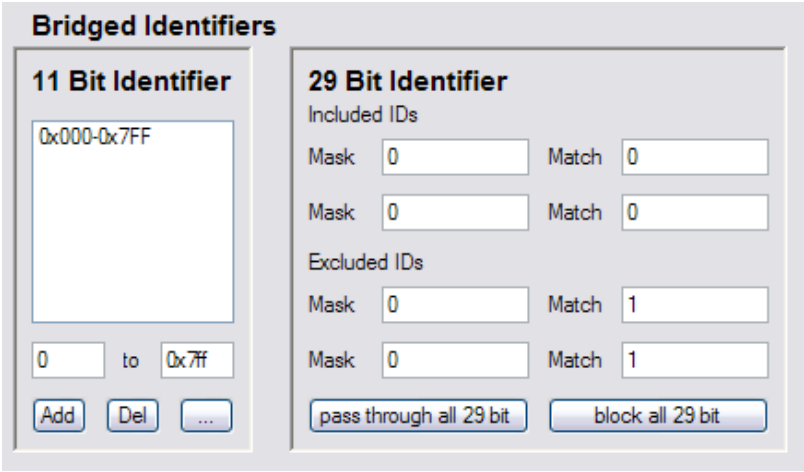

Figure 20: Bridged Identifiers

In the field *Bridged Identifiers* it is possible to define different transmission filters for the transmission (via RF-Channel) of 11-bit and 29-bit identifiers.

The settings (default) shown in the figure above allow the transmission of all 11-bit and 29-bit CAN identifiers; a transmission-filtering is not proceeded.

7.6.1 11-Bit Identifier

By means of the buttons **Add** and **Del** identifier ranges, which are specified in the input fields above the buttons, can be added or deleted.

To add a value or range enter the first and last value of the range in the input fields and click the button **Add**.

The identifiers will be shown in the list of 11 bit identifier.

To delete identifiers from the list double click the identifier range in the list. The values are shown in the input fields then and can be deleted with the **Del** button.

The values must be entered in the input fields as hexadecimal values with „0x“ as prefix. Otherwise the entries are interpreted as decimal values but shown as hexadecimal values in the filter field.

(Example: 2047 ≙ 0x7FF, 100 ≙ 0x64)

Figure 21: 11 Bit Identifier

The button ... opens the following window.

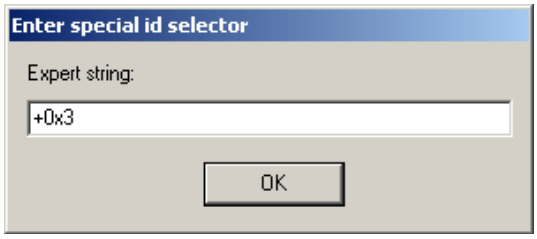

The window *Enter special id selector* allows a fast and flexible adding or deleting of identifier ranges with basic operators.

Figure 22: Enter special id selector

Operator	Description	Example	
+	add ID range to filter list	+10-17	adds IDs from 10 up to 17 $_{decimal}$
-	delete ID range from filter list	-0x70-300	deletes IDs from 112 up to 300 $_{decimal}$
=	set ID range in the filter list	=0-2047	sets all IDs from 0 up to 0x7FF

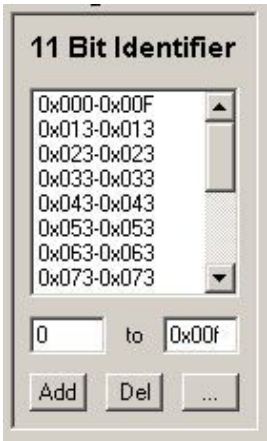

If a number contains an 'x', it is always considered hexadecimal, whether preceded by '0x' or $ or not.

The 'x' will be a wildcard in the last three digits of the ID entered for a 'don' t care' nibble,
e.g. =7xx will set 0x700 - 0x7FF.

A second example is shown in the figure on the left:

+0x3 will set the identifiers: 0x003, 0x013, 0x023, ..., 0x0F3

Figure 23: IDs entered by special id selector

Attention:
The message-IDs, that can be **transmitted** via radio are each entered.
IDs which are not listed can not be transmitted per radio communication by this device, but the IDs can be received.

Example:

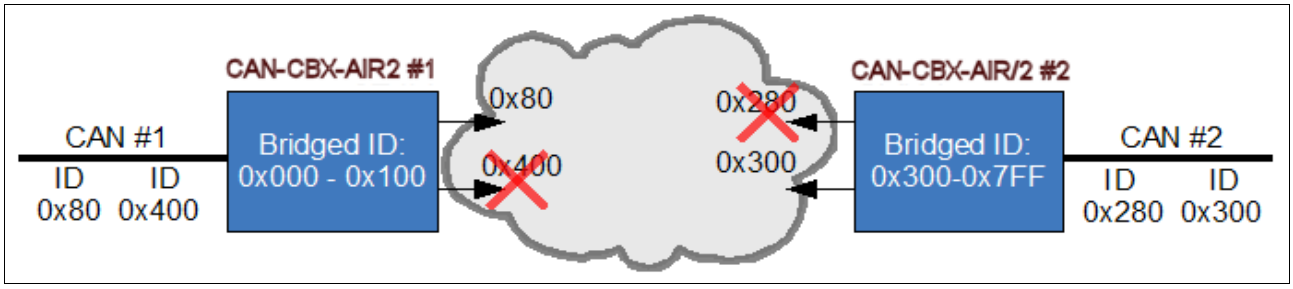

Figure 24: Example of filtering 11-bit identifier

The transmission filter of CAN-CBX-AIR/2 #1 is set to 0x000 – 0x100 , all CAN messages received by the CAN interface with CAN identifiers in the range 0x000 to 0x100 will be transmitted via RF.

CAN-CBX-AIR/2 #2 has a transmission filter set to 0x300-0x7FF. So only CAN messages with CAN identifiers in the range 0x300 to 0x7FF will be transmitted.

In the example above CAN-CBX-AIR/2 #1 will not transmit CAN-Identifier 0x400 and Module #2 will block message 0x280.

Nonetheless module #1 will send the message with identifier 0x300 (that comes from module #2) on the CAN bus and module #2 will send the identifier 0x80 message on the CAN bus.

7.6.2 29-Bit Identifier

For the filtering of 29-bit identifiers *Mask* and *Match* values can be specified to include or exclude identifiers.

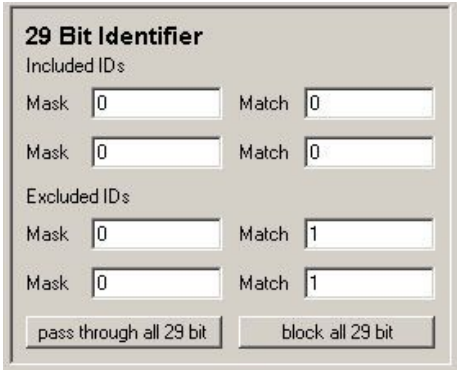

Figure 25: 29 Bit Identifier

pass through all 29 bit

Clicking the button sets the default values for *Mask* and *Match*, that let all identifiers pass as follows:
- Included IDs: *Mask* = *'0'*, *Match* = '0'
- Excluded IDs: *Mask* = *'0'*, *Match* = '1'

block all 29 bit

Clicking the button sets values for *Mask* and *Match*, that will block all identifiers as follows:
- Included IDs: *Mask* = *'0'*, *Match* = '1'
- Excluded IDs: *Mask* = *'0'*, *Match* = '0'

With *Mask* you can specify whether single bits of the identifier are relevant for the CAN-identifier filtering or not.

Bit set to	Meaning	
'0'	not relevant for filtering	The identifier bit will become '0' after bitwise AND and thus the real value of the identifier bit will become irrelevant to this filter!
'1'	relevant for filtering	The identifier bit is conserved by the bitwise AND and thus the value of the identifier bit is relevant to this filter and must match *Match* to pass the filter!

With *Match* you define the value, the resulting bits (after bitwise AND of identifier and *Mask*) must match to pass the filter (*Included IDs*) or to be excluded (*Excluded IDs*).

An identifier that can pass the filter according to the settings of the *Included IDs* can be blocked by the settings of the *Excluded IDs.* The criteria for exclusion are decisive.

Included IDs

Example settings for Included IDs		
Mask	**Match**	**pass through**
0	0	all
0	1	none
0x1FFFFFF0	0x123450	0x123450 - 0x12345F
0x1FFFFF0F	0x123405	0x123405, 0x123415, 0x123425, 0x123435, 0x123445...0x1234F5
0x1FFFFFFF	0x12345678	only 0x12345678
1	0	all even-numbered IDs
1	1	all odd-numbered IDs
0xF	7	all IDs with 7 as last nibble
0x1FFFFF00	0x200	0x200 - 0x2FF

Example: Included IDs: *Mask* = '0xF', *Match* = '7'
Only CAN objects with value '7' in the last nibble shall be allowed to pass the filter.
Match = 0x7 which is in binary code = 0111.
Thus the 4 bits of the last nibble of the identifier have to be compared. The higher bits of the identifier are not relevant in this example
The filter must be set to *Mask* = 0xF which is in binary code = 1111
Now the value of these four bits of the last nibble of the identifier have to match the value of *Match* to be passed through.

Excluded IDs

Example settings for Excluded IDs		
Mask	**Match**	**block**
0	0	all
0	1	none
0x1FFFFF00	0x200	0x200 - 0x2FF
0x1FFFFFFF	0x18B	0x18B

Example: Excluded IDs:
In this example a range of identifiers e.g. 0x180-0x18A shall be passed through the filter.

For Included IDs you have to enter:
Mask = 0x1FFFFFF8 *Match* = 0x180 0x180-0x187 can pass the filter
Mask = 0x1FFFFFFC *Match* = 0x188 0x188-0x18B can pass the filter

Now the range of identifiers from 0x180 to 0x18B can pass the filter.
To get the specified range of identifiers the identifier 0x18B must be excluded.

For Excluded IDs you have to enter:
Mask = 0x1FFFFFFF *Match* = 0x18B 0x18B is blocked
Mask = 0 *Match* = 1 nothing else is blocked

7.7 How to Read and Save Configuration on the Module

By means of the button **Read from CAN-AIR/2** it is possible to read out the current configuration of the connected module (CAN-AIR/2 in this example).

Save to CAN-AIR/2 is for saving the configuration parameters into the CAN-CBX-AIR/2.

After clicking on the buttons a scan of all CAN-CBX-AIR/2 (which are connected via USB) will start.

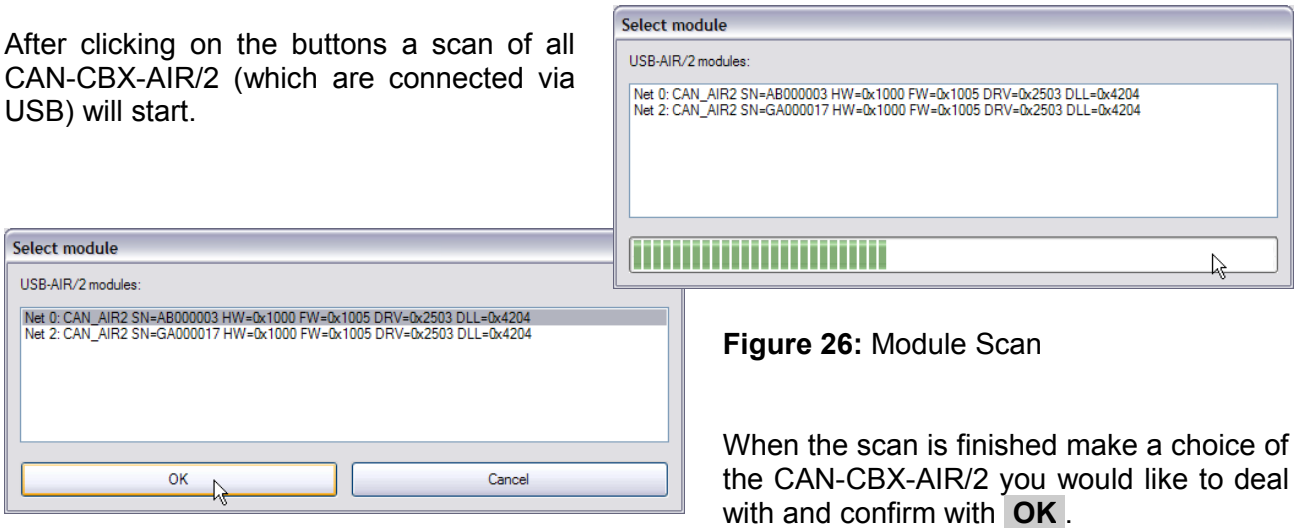

Figure 26: Module Scan

When the scan is finished make a choice of the CAN-CBX-AIR/2 you would like to deal with and confirm with **OK**.

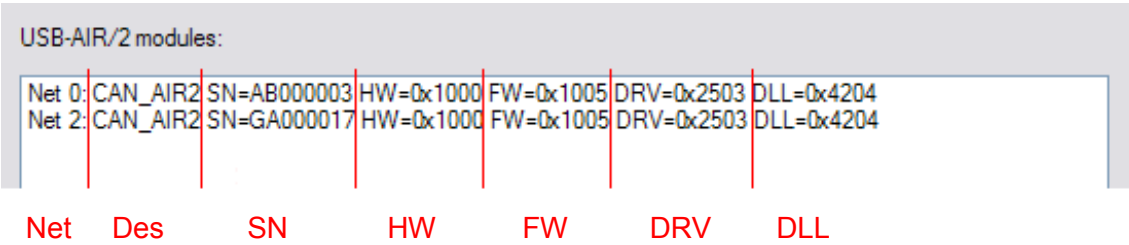

Figure 27: Scan result

The scan result shows also these details of the connected CAN-CBX-AIR/2 modules:

Net	Logical net number of the CAN interface	
Des	Device name	
SN	Serial no. for module identification	
HW	Hardware version	1.0
FW	Firmware version	1.005
DRV	Software version of the device driver	2.5.0.3
DLL	Software version of the NTCAN.DLL	4.2.0.4

7.8 How to Read and Save Configuration as a File

With the button **Save to file...** it's possible to save a configuration as a file on the PC.

Using **Load from file...** a configuration file is opened.
This functionality is of help in case of "Bridge"-mode operation in order to save the same configuration on another module.

8. Technical Data

8.1 General Technical Data

Power supply voltage	nominal voltage: 24 VDC input voltage range: 24 V ± 10% current consumption (24 V, 20°C): typically: 40 mA
Current source	the CAN-CBX-AIR/2 must be supplied by a limited current source: - **without** overcurrent protective device: maximum output current: 8 A, but not higher than 100VA - **with** overcurrent protective device: rated to a current of 3.125 A
Connectors	24V 24V-power supply voltage (4-pin COMBICON connector with spring-cage connection, X1) CAN CAN interface (5-pin Mini-COMBICON connector, X2) InRailBus CAN interface and power supply voltage via InRailBus (5-pin CAN-CBX-TBUS-connector, Phoenix Contact, X5) DIAG USB 2.0 interface (USB socket type-B, X4) RF antenna socket (SMA-connector, X3)
Temperature range	0...50°C ambient temperature
Humidity	max. 90%, non-condensing
IP rating	IP20
Protection class	Device of protection class III The CAN-CBX-AIR/2 may only be driven by power supply current circuits, that are contact protected. A power supply, that provides a safety extra-low voltage (SELV or PELV) according to EN 60950-1, complies with this conditions. Functional earthing is allowed, but must not conflict with the safety considerations of the system.
Pollution degree	maximum permissible according to DIN EN 61131-2: Pollution Degree 2
Housing	Plastic housing for carrier rail mounting NS35/7,5 DIN EN 60715
Dimensions	22.5 mm x 99 mm x 114.5 mm (without connectors and antenna)
Weight	125 g

Table 7: General data of the module

8.2 USB Interface

USB interface	USB 2.0, Full-speed, 12 Mbits/s
Controller	integrated in ARM-Cortex-M3 STM32F105, 32-bit, 72 MHz
Connector	USB connector type B

Table 8: Data of the USB interface

8.3 CAN Interface

Number of CAN interfaces	1x CAN
CAN controller	integrated in microcontroller ARM Cortex M3, STM32F105 acc. to ISO 11898-1 (CAN 2.0 A/B)
CAN protocol	according to ISO 11898-1
Physical Layer	High-speed CAN interface according to ISO 11898-2, bit rate up to 1 Mbit/s
Electrical isolation	via optocoupler and DC/DC converter, 500 V (effective) between CAN potential and module-system-potential with pollution degree 1
Bus termination	terminating resistor has to be set externally, if required
Connector	via CAN connector or InRailBus

Table 9: Data of the CAN interface

8.4 Radio Communication

Antenna connector	SMA-connector, coaxial-jack receptacle, (inner conductor: female)
Carrier frequency	ISM-band, 2.4 GHz
Transceiver	typical peak power output: + 12 dBm, typical Rx sensitivity for BER = 10^{-4}: -81 dBm
Antenna	connector of the antenna: coaxial SMA-plug (inner conductor: male) impedance: 50 Ω nominal antenna gain: 5.0 dBi
transmission range	approx. 150 m line-of-sight (LoS) distance

8.5 Software Support

For the CAN-CBX-AIR/2 CAN layer 2 drivers (CAN-API) are available for Windows 2000 (from SP4), Windows XP and XP x64, Windows Vista and Vista x64, Windows 7 and 7 x64.

Optional CANopen® support is available for all platforms.

9. Connector Assignments

9.1 CAN

Device connector : Phoenix Contact MC 1,5/5-GF-3,81
Line connector: Phoenix Contact FK-MCP 1,5/5-STF-3,81, spring-cage connection
Phoenix Contact Order No.: 1851261 (included in delivery)
For conductor connection and conductor cross section see page 41.

Pin Position:

(device connector view)

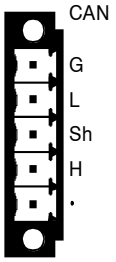

Pin Assignment:

Label	Signal	Pin
G	CAN_GND	1
L	CAN_L	2
Sh	Shield	3
H	CAN_H	4
•	-	5

Signal description:

CAN_L, CAN_H ... CAN signals
CAN_GND ... reference potential of the local CAN physical layer
Shield ... pin for line shield connection (using hat rail mounting direct contact to the mounting rail potential)
- ... not connected

Recommendation of an adapter cable from 5-pin COMBICON (here line connector FK-MCP1,5/5-STF_3,81 with spring-cage-connection) to 9-pin DSUB:

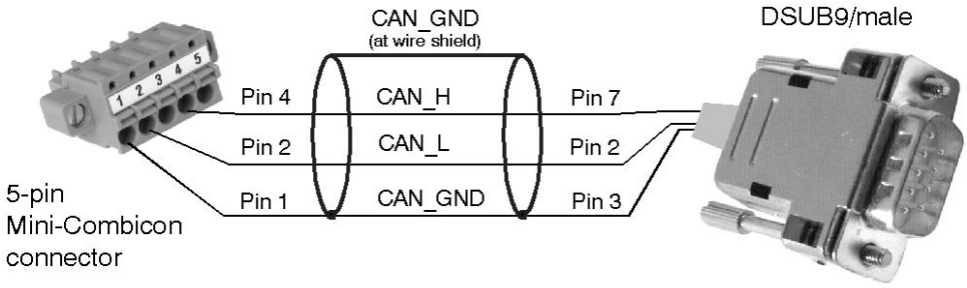

The assignment of the 9-pin DSUB-connector is designed according to CiA DS-102.

The assignment of the 5-pin Mini-COMBICON is designed according to CiA DR-303 Part 1

9.2 USB

Note:
The module may only be connected to USB nets with USB interfaces with version 1.1 or 2.0! Version 2.0 is preferred due to performance considerations.
Operability can only be guaranteed for these USB interfaces.

Device connector: USB receptacle, standard type B

Pin Position:

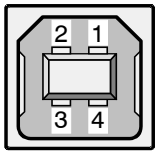

Pin Assignment:

Pin	Signal
1	V_{BUS}
2	D-
3	D+
4	GND
Shell	Shield

USB socket (Type B)

Signal Description:

V_{BUS}... +5 V power supply voltage
D+, D-... USB signal lines Data+, Data-
GND... Reference potential
Shield... Shielding (connected to the shell of the connector)

9.3 24 V-Power Supply Voltage

Attention:
The CAN-CBX-AIR/2 must be supplied by a limited current source (see chapter 8.1)!

Attention:
Device of protection class III
The CAN-CBX-AIR/2 may only be driven by power supply current circuits, that are contact protected. A power supply, that provides a safety extra-low voltage (SELV or PELV) according to EN 60950-1, complies with this conditions.

Functional earthing is allowed, but must not conflict with the safety considerations of the system.

Device socket: Phoenix Contact MSTBO 2,5/4-G1L-KMGY
Line connector: Phoenix Contact FKCT 2,5/4-ST, 5.0 mm pitch,
spring cage connection,
Phoenix Contact order No.: 19 21 90 0 (included in the scope of delivery)
For conductor connection and conductor cross section see page 41.

Pin Position:

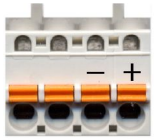

1 2 3 4

Pin Assignment:

Labelling on the CAN-CBX-AIR/2	24 V	
	M	P
Labelling on the connector	-	+

Pin	**1**	**2**	**3**	**4**
Signal	Do not connect!	Do not connect!	M24 (GND)	P24 (+ 24 V)

Please refer to the connecting diagram page 9.

Signal Description:

P24... power supply voltage +24 V ± 10 %
M24... reference potential

9.4 24V and CAN via InRailBus

Attention:
Please observe the information concerning the 24 V power supply in chapter 8.1!

Connector type: Mounting-rail bus connector of the CBX-InRailBus
Phoenix Contact ME 22,5 TBUS 1,5/5-ST-3,81 KMGY

Connector View:

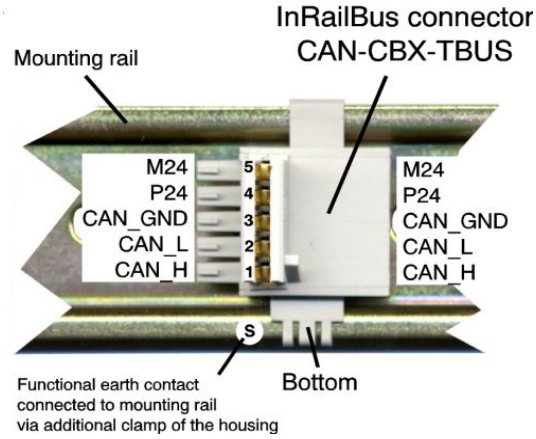

Pin Assignment:

Pin	Signal
5	M24 (GND)
4	P24 (+24 V)
3	CAN_GND
2	CAN_L
1	CAN_H

S	FE (PE_GND)

Signal Description:

CAN_L,
CAN_H ... CAN signals
CAN_GND ... reference potential of the local CAN-Physical layers
P24... power supply voltage +24 V
M24... reference potential
FE... functional earth contact (EMC) (connected to mounting rail potential)

9.5 Conductor Connection/Conductor Cross Sections

The following table contains an extract of the technical data of the line connectors.

Interface	24 V Power Supply Voltage	CAN-Connector
Connector type plug component (Range of articles)	FKCT 2,5/..-ST KMGY	FK-MCP 1,5/5-STF-3,81
Connection method	spring-cage connection	spring-cage connection
Stripping length	10 mm	9 mm
Conductor cross section solid min.	0.2 mm²	0.14 mm²
Conductor cross section solid max.	2.5 mm²	1.5 mm²
Conductor cross section stranded min.	0.2 mm²	0.14 mm²
Conductor cross section stranded max.	2.5 mm²	1.5 mm²
Conductor cross section stranded, with ferrule without plastic sleeve min.	0.25 mm²	0.25 mm²
Conductor cross section stranded, with ferrule without plastic sleeve max.	2.5 mm²	1.5 mm²
Conductor cross section stranded, with ferrule with plastic sleeve min.	0.25 mm²	0.25 mm²
Conductor cross section stranded, with ferrule with plastic sleeve max.	2.5 mm²	0.5 mm²
Conductor cross section AWG/kcmil min.	24	26
Conductor cross section AWG/kcmil max	12	16
2 conductors with same cross section, solid min.	not allowed	not allowed
2 conductors with same cross section, solid max.	not allowed	not allowed
2 conductors with same cross section, stranded min.	not allowed	not allowed
2 conductors with same cross section, stranded max.	not allowed	not allowed
2 conductors with same cross section, stranded, ferrules without plastic sleeve, min.	not allowed	not allowed
2 conductors with same cross section, stranded, ferrules without plastic sleeve, max.	not allowed	not allowed
2 conductors with same cross section, stranded, TWIN ferrules with plastic sleeve, min.	0.5 mm²	not allowed
2 conductors with same cross section, stranded, TWIN ferrules with plastic sleeve, max.	1.0 mm²	not allowed
Minimum AWG according to UL/CUL	26	28
Maximum AWG according to UL/CUL	12	16

10. Correctly Wiring Electrically Isolated CAN Networks

For the CAN wiring all applicable rules and regulations (EC, DIN), e.g. regarding electromagnetic compatibility, security distances, cable cross-section or material, have to be met.

10.1 Light Industrial Environment (*Single* Twisted Pair Cable)

10.1.1 General Rules

Note:
esd grants the EC Conformity of the product, if the CAN wiring is carried out with at least single shielded **single** twisted pair cables that match the requirements of ISO 11898-2. Single shielded *double* twisted pair cable wiring as described in chapter 10.2. ensures the EC Conformity as well.

The following **general rules** for CAN wiring with single shielded *single* twisted pair cable must be followed:

1	A cable type with a wave impedance of about 120 Ω ±10% with an adequate wire cross-section (0.22 mm²) has to be used. The voltage drop over the wire has to be considered!
2	For light industrial environment use at least a two-wire CAN cable. Connect • the two twisted wires to the data signals (CAN_H, CAN_L) and • the cable shield to the reference potential (CAN_GND)!
3	The reference potential CAN_GND has to be connected to the functional earth (FE) at exactly **one** point.
4	A CAN net must not branch (exception: short cable stubs) and has to be terminated with the characteristic impedance of the line (generally 120 Ω ±10%) at both ends (between the signals CAN_L and CAN_H and **not** at GND)!
5	Keep cable stubs as short as possible (l < 0.3 m)!
6	Select a working combination of bit rate and cable length.
7	Keep away cables from disturbing sources. If this cannot be avoided, double shielded wires are recommended.

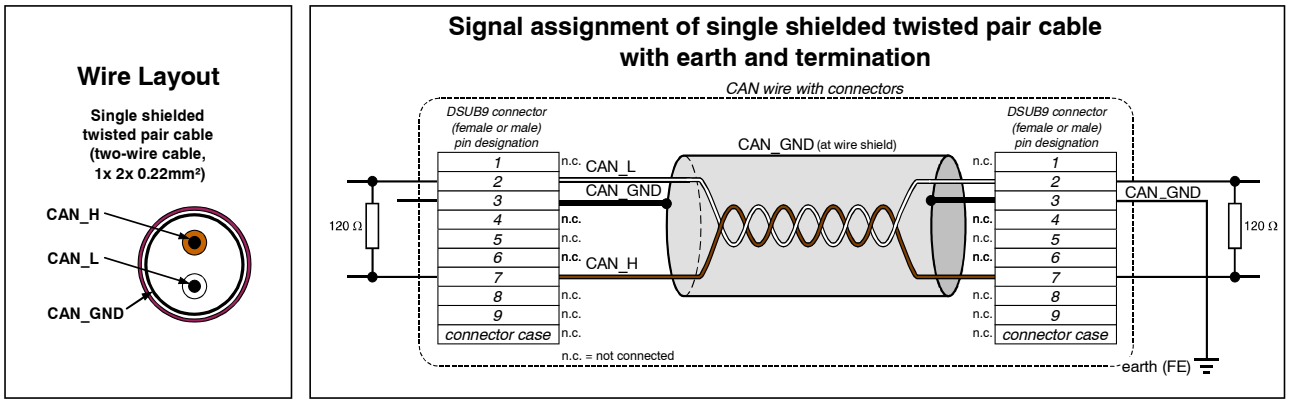

Figure 28: CAN wiring for light industrial environment

10.1.2 Cabling

- for devices which have only one CAN connector per net use T-connector and stub (shorter than 0.3 m) (available as accessory)

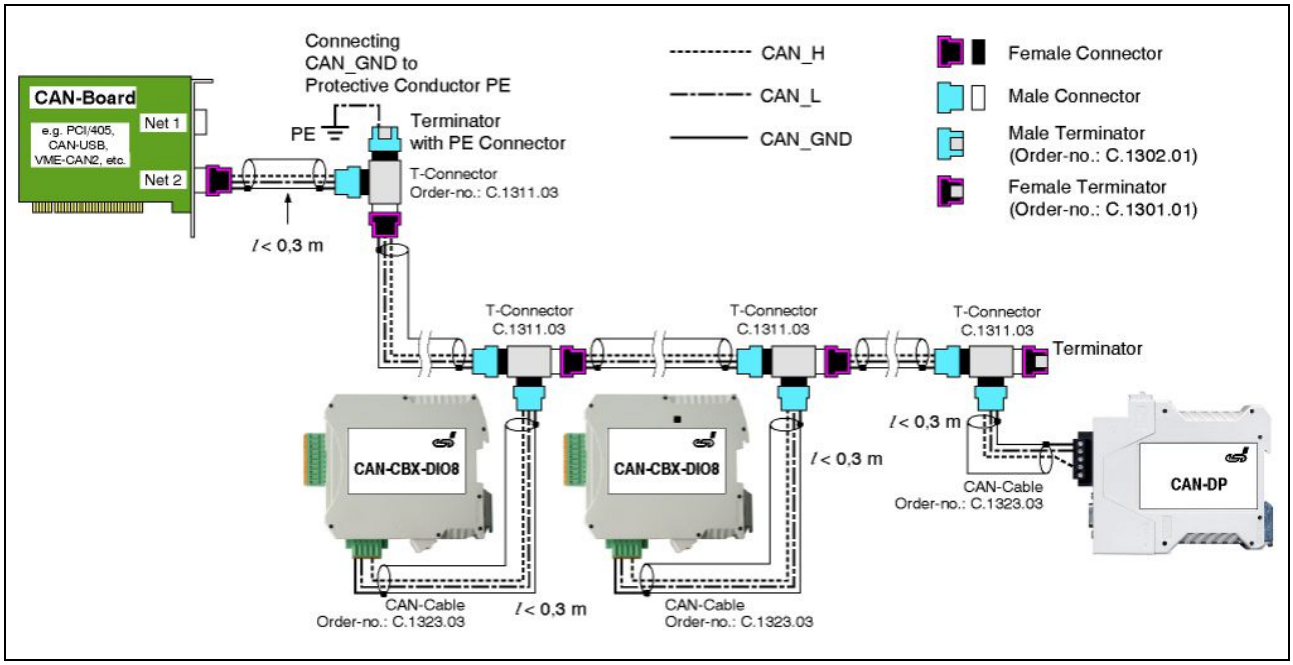

Figure 29: Example for proper wiring with single shielded single twisted pair wires

10.1.3 Termination

- Use external termination plugs, because they can be rediscovered more easily than internal terminations within the CAN devices!
- 9-pin DSUB-termination connectors with male and female contacts and earth terminal are available as accessories

10.2 Heavy Industrial Environment (*Double* Twisted Pair Cable)

10.2.1 General Rules

The following **general rules** for the CAN wiring with single shielded *double* twisted pair cable must be followed:

1	A cable type with a wave impedance of about 120 Ω ±10% with an adequate wire cross-section (0.22 mm²) has to be used. The voltage drop over the wire has to be considered!
2	For heavy industrial environment use a four-wire CAN cable. Connect • two twisted wires to the data signals (CAN_H, CAN_L) and • the other two twisted wires to the reference potential (CAN_GND) and • the cable shield to functional earth (FE) at least at one point!
3	The reference potential CAN_GND has to be connected to the functional earth (FE) at exactly **one** point.
4	A CAN bus line must not branch (exception: short cable stubs) and has to be terminated with the characteristic impedance of the line (generally 120 Ω ±10%) at both ends (between the signals CAN_L and CAN_H and **not** at GND)!
5	Keep cable stubs as short as possible (l < 0.3 m)!
6	Select a working combination of bit rate and cable length.
7	Keep away CAN cables from disturbing sources. If this can not be avoided, double shielded cables are recommended.

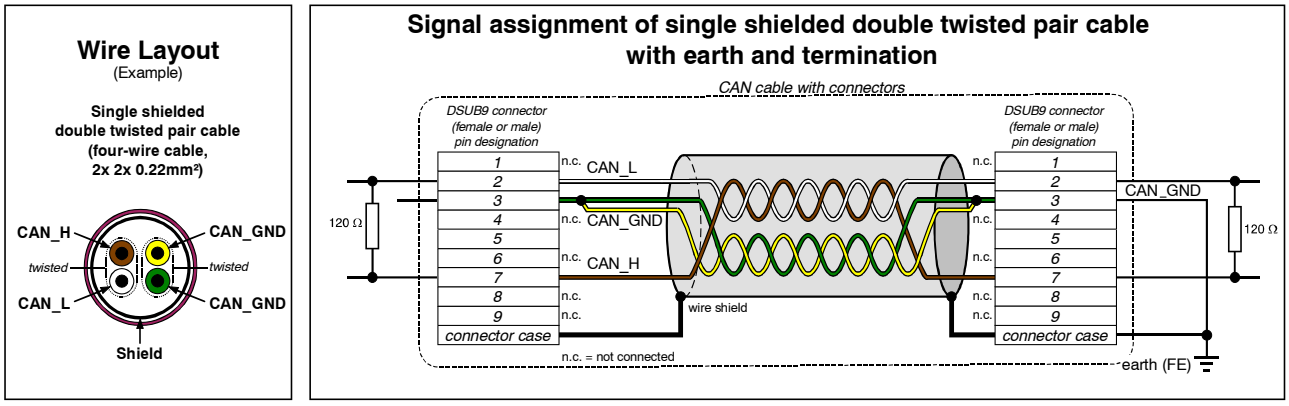

Figure 30: CAN wiring for heavy industrial environment

10.2.2 Device Cabling

- To connect CAN devices which are equipped with one CAN connector per net, use T-connectors and cable stubs (shorter than 0.3 m).

Attention:
If single shielded *double* twisted pair cables are used, realize the T-connections by means of connectors that support connection of two CAN cables at one connector where the cable's shield is looped through e.g. DSUB9 connector from ERNI (ERBIC CAN BUS MAX, order no.:154039).

The usage of esd's T-connector type C.1311.03 is not recommended for single shielded *double* twisted pair cables because the shield potential of the conductive DSUB housing is not looped through this T-connector type.

Furthermore, mixed use of single twisted and double twisted cables should be avoided!

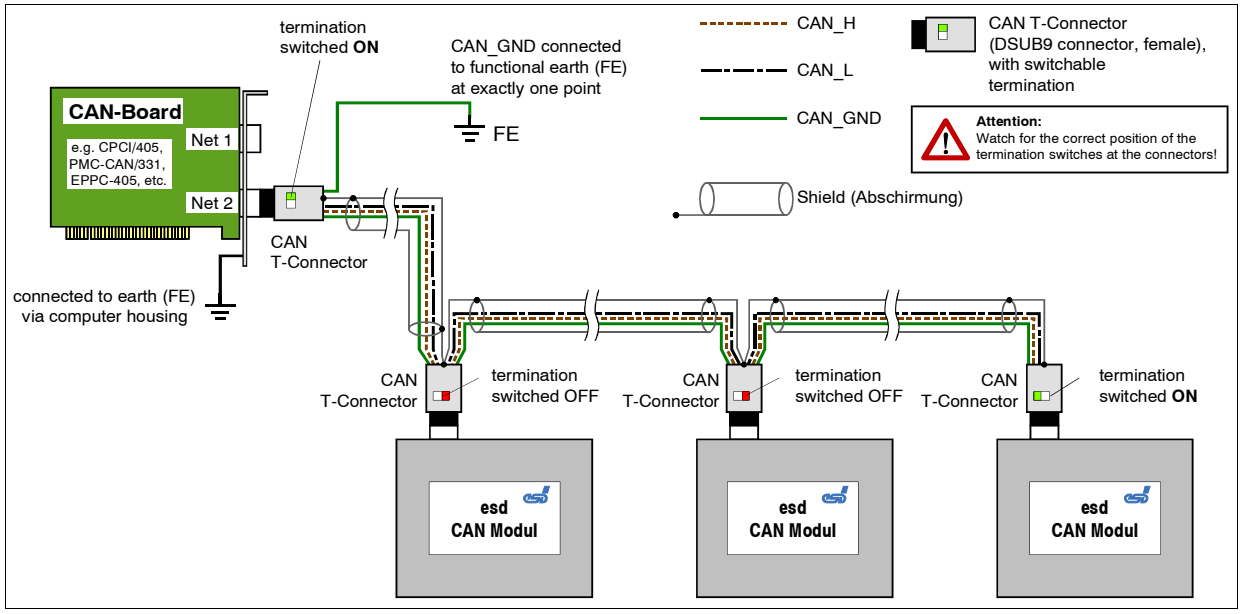

Figure 31: Example for proper wiring with single shielded double twisted pair cables

10.2.3 Termination

- Use external termination plugs, because they can later be rediscovered more easily than internal terminations within the CAN devices!

- A 9-pin DSUB-connector with integrated switchable termination resistor can be ordered e.g. from ERNI (ERBIC CAN BUS MAX, female contacts, order no.:154039).

10.3 Electrical Grounding

- CAN_GND has to be connected between the CAN devices, because esd CAN devices are electrically isolated from each other!
- CAN_GND has to be connected to the earth potential (FE) at **exactly one** point of the network!
- Each CAN interface without electrically isolated interface acts as an earthing point. For this reason do not connect more than one CAN device without electrically isolated CAN interface!
- Earthing can e.g. be made at a connector/T-connector.

10.4 Bus Length

- Optical couplers are delaying the CAN signals. esd modules typically reach a wire length of 37 m at 1 Mbit/s within a closed net without impedance disturbances like e.g. cable stubs >> 0.3 m.

Bit rate [Kbits/s]	Typical values of reachable wire length **with esd interface** l_{max} [m]	**CiA recommendations** (07/95) for reachable wire lengths l_{min} [m]
1000	37	25
800	59	50
666.6	80	-
500	130	100
333.3	180	-
250	270	250
166	420	-
125	570	500
100	710	650
66.6	1000	-
50	1400	1000
33.3	2000	-
20	3600	2500
12.5	5400	-
10	7300	5000

Table 10: Recommended cable lengths at typical bit rates (with esd-CAN interfaces)

Note:
Please note the recommendations according to ISO 11898 for the selection of the cross section of the wire depending of the wire length.

10.5 Examples for CAN Cables

10.5.1 Cable for Light Industrial Environment Applications (Two-Wire)

Manufacturer	Cable Type
U.I. LAPP GmbH Schulze-Delitzsch-Straße 25 70565 Stuttgart Germany www.lappkabel.com	e.g. UNITRONIC ®-BUS CAN UL/CSA (1x 2x 0.22) (UL/CSA approved) Part No.: 2170260 UNITRONIC ®-BUS-FD P CAN UL/CSA (1x 2x 0.25) (UL/CSA approved) Part No.: 2170272
ConCab GmbH Äußerer Eichwald 74535 Mainhardt Germany www.concab.de	e. g. BUS-PVC-C (1x 2x 0.22 mm²) Order No.: 93 022 016 (UL appr.) BUS-Schleppflex-PUR-C (1x 2x 0.25 mm²) Order No.: 94 025 016 (UL appr.)

10.5.2 Cable for Heavy Industrial Environment Applications (Four-Wire)

Manufacturer	Cable Type
U.I. LAPP GmbH Schulze-Delitzsch-Straße 25 70565 Stuttgart Germany www.lappkabel.com	e.g. UNITRONIC ®-BUS CAN UL/CSA (2x 2x 0.22) (UL/CSA approved) Part No.: 2170261 UNITRONIC ®-BUS-FD P CAN UL/CSA (2x 2x 0.25) (UL/CSA approved) Part No.: 2170273
ConCab GmbH Äußerer Eichwald 74535 Mainhardt Germany www.concab.de	e. g. BUS-PVC-C (2x 2x 0.22 mm²) Order No.: 93 022 026 (UL appr.) BUS-Schleppflex-PUR-C (2x 2x 0.25 mm²) Order No.: 94 025 026 (UL appr.)

Note:
Configured CAN cables can be ordered from **esd**.

11. CAN Troubleshooting Guide

The CAN Troubleshooting Guide is a guide to find and eliminate the most frequent hardware-error causes in the wiring of CAN-networks.

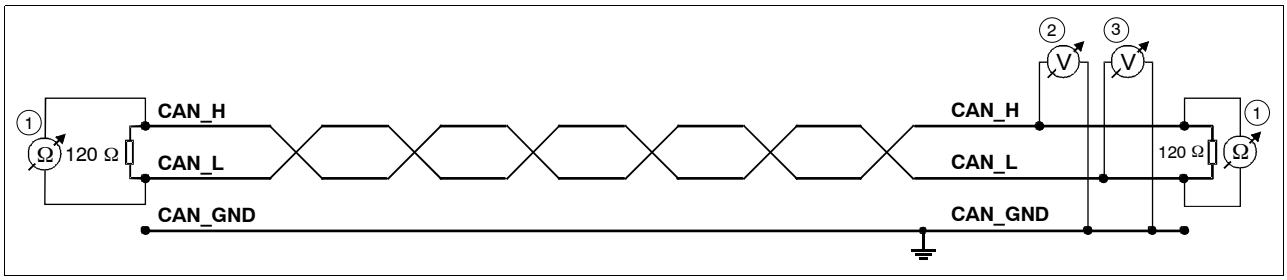

Figure 32: Simplified diagram of a CAN network

11.1 Termination

The termination is used to match impedance of a node to the impedance of the transmission line being used. When impedance is mismatched, the transmitted signal is not completely absorbed by the load and a portion is reflected back into the transmission line. If the source, transmission line and load impedance are equal these reflections are eliminated. This test measures the series resistance of the CAN data pair conductors and the attached terminating resistors.

To test it, please

1. Turn off all power supplies of the attached CAN nodes.
2. Measure the DC resistance between CAN_H and CAN_L at the ends of the network ① (see figure above) and at the centre of the network (if the network cable consists of more than one line section).

The measured value should be between 50 Ω and 70 Ω. The measured value should be nearly the same at each point of the network.

If the value is below 50 Ω, please make sure that:
- there is no short circuit between CAN_H and CAN_L wiring
- there are not more than two terminating resistors
- the nodes do not have faulty transceivers.

If the value is higher than 70 Ω, please make sure that:
- there are no open circuits in CAN_H or CAN_L wiring
- your bus system has two terminating resistors (one at each end) and that they are 120 Ω each.

11.2 Electrical Grounding

The CAN_GND of the CAN network has to be connected to the functional earth potential (FE) at only **one** point. This test will indicate if the CAN_GND is grounded in several places.
To test it, please

1. Disconnect the CAN_GND from the earth potential (FE).
2. Measure the DC resistance between CAN_GND and earth potential (see figure on the right).
3. Connect CAN_GND to earth potential.

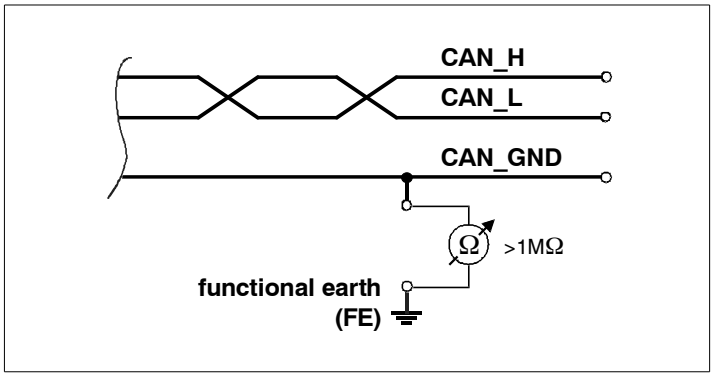

Figure 33: Simplified schematic diagram of ground test measurement

The resistance should be higher than 1 MΩ. If it is lower, please search for additional grounding of the CAN_GND wires.

11.3 Short Circuit in CAN Wiring

A CAN bus might possibly still be able to transmit data if there is a short circuit between CAN_GND and CAN_L, but the error rate will increase strongly. Make sure that there is no short circuit between CAN_GND and CAN_L!

11.4 CAN_H/CAN_L-Voltage

Each node contains a CAN transceiver that outputs differential signals. When the network communication is idle the CAN_H and CAN_L voltages are approximately 2.5 volts. Faulty transceivers can cause the idle voltages to vary and disrupt network communication.

To test for faulty transceivers, please

1. Turn on all supplies.
2. Stop all network communication.
3. Measure the DC voltage between CAN_H and GND ②
   (see figure above).
4. Measure the DC voltage between CAN_L and GND ③
   (see figure above).

Normally the voltage should be between 2.0 V and 4.0 V.

If it is lower than 2.0 V or higher than 4.0 V, it is possible that one or more nodes have faulty transceivers. For a voltage lower than 2.0 V please check CAN_H and CAN_L conductors for continuity. For a voltage higher than 4.0 V, please check for excessive voltage.

To find the node with a faulty transceiver please test the CAN transceiver resistance (see below).

11.5 CAN Transceiver Resistance Test

CAN transceivers have one circuit that controls CAN_H and another circuit that controls CAN_L. Experience has shown that electrical damage to one or both of the circuits may increase the leakage current in these circuits.

To measure the current leakage through the CAN circuits, please use an resistance measuring device and:

1. Switch off the node and disconnect it from the network ④ (see figure below).

2. Measure the DC resistance between CAN_H and CAN_GND ⑤ (see figure below).

3. Measure the DC resistance between CAN_L and CAN_GND ⑥ (see figure below).

The measured resistance has to be about 500 kΩ for each signal. If it is much lower, the CAN transceiver it is probably faulty.
Another sign for a faulty transceiver is a very high deviation between the two measured input resistance (>> 200%).

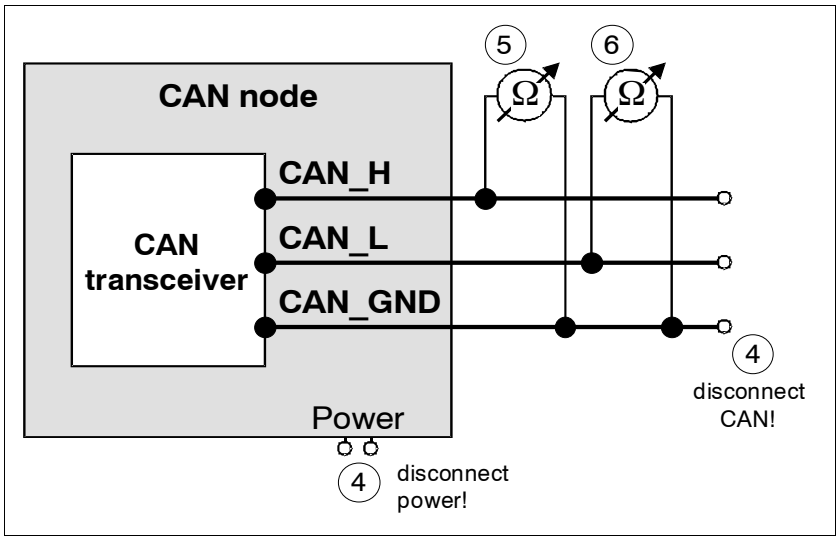

Figure 34: Measuring the internal resistance of CAN transceivers

12. Software Licenses

The CAN-CBX-AIR/2 gateway uses the open source FreeRTOS™ operating system.
For the full license text please see esd's "3rd party licensor notice" document that is part of the product's documentation on the enclosed CD.

13. Declaration of Conformity

EG-KONFORMITÄTSERKLÄRUNG
EC DECLARATION OF CONFORMITY

Adresse / *Address*
esd electronic system design gmbh
Vahrenwalder Str. 207
30165 Hannover
Germany

esd erklärt, dass die Produkte
esd declares, that the products

Typ, Modell, Artikel-Nr.
Type, Model, Article No.

CAN-CBX-AIR/2	**C.3051.02**
CAN-CBX-AIR/2-Bridge	**C.3051.04**

die Anforderungen der Normen *fulfills the requirements of the standards*	**EN 61000-6-2:2005, EN 61000-6-3:2007 +A1:2011, ETSI EN 301 489-1 V1.9.2: 2011**	**ETSI EN 300 328 V1.7.1:2006, ETSI EN 301 489-1 V1.9.2: 2011, ETSI EN 301 489-17 V2.1.1: 2009**	**EN 60950-1:2006 + A11:2009 + A1:2010**
gemäß folgendem Prüfbericht erfüllt. *according to test certificate.*	**H-K00-0436-12**	**H-K00-0437-12, H-K00-0436-12**	**Testreport V 1.0**
Das Produkt entspricht damit der EG-Richtlinie *Therefore the product corresponds to the EC-Directive*	**2004/108/EG (EMV) *(EMC)***	**1999/5/EG (R&TTE)**	**2006/95/EG (NSR) *(LVD)***

Das Produkt entspricht der EG-Richtlinie „RoHS" *The product corresponds to the EC-Directive 'RoHS'*	**2011/65/EU**

Diese Erklärung verliert ihre Gültigkeit, wenn das Produkt nicht den Herstellerunterlagen entsprechend eingesetzt und betrieben wird, oder das Produkt abweichend modifiziert wird.
This declaration loses its validity if the product is not used or run according to the manufacturer's documentation or if non-compliant modifications are made.

Name / *Name* T. Ramm
Funktion / *Title* CE-Koordinator / *CE Coordinator*
Datum / *Date* Hannover, 2013-04-30

Rechtsgültige Unterschrift / *authorized signature*

I:\Texte\Doku\MANUALS\CAN\CBX\CAN-CBX-AIR2\Konformitaetserklaerung\CAN-CBX-AIR2_Konformitaetserklaerung_2013-04-30.odt

14. Order Information

Type	Properties	Order No.
CAN-CBX-AIR/2	Wireless CAN bridge (one module) 2,4 GHz ISM-band, CAN according to ISO 11898-1 1 MBit/s, ISO 11898-2, electrical isolation CANopen CiA DSP301/WDP457 Nominal voltage: 24VDC, top hat rail mounting	C.3051.02
CAN-CBX-AIR/2**-Bridge**	Wireless CAN bridge, 2x CAN-CBX-AIR/2 (C.3051.02), wireless radio communication of separated CAN networks, ISM-band (2,4 GHz) , external antenna Communication range in free field area up to 150 m, incl. CAN-DRV-CD for Windows and Linux	C.3051.04
Accessories		
 **CAN-CBX-TBUS**	Mounting-rail bus connector of the CBX-InRailBus for CAN-CBX modules (order separately)	C.3000.01
 **CAN-CBX-TBUS-Connector**	Terminal plug of the CBX-InRailBus for the connection of the +24V power supply voltage and the CAN interface Female type	C.3000.02
 **CAN-CBX-TBUS-Connection adapter**	Terminal plug of the CBX-InRailBus for the connection of the +24V power supply voltage and the CAN-Interface Male type	C.3000.03

Table 11: Order information

PDF Manuals
Manuals are available in English and usually in German as well. For availability of manuals see table below.
Please download the manuals as PDF documents from our esd website www.esd.eu for free.

Manuals		Order No.
CAN-CBX-AIR/2-ME	Hardware manual in English	C.3051.21

Table 12: Available manuals

Printed Manuals
If you need a printout of the manual additionally, please contact our sales team: sales@esd.eu for a quotation. Printed manuals may be ordered for a fee.