VME-DAC812
8 Analog Outputs

esd gmbh

Up To 8 D/A Converters
- *General purpose analog output board*
- *12 bits resolution, 5 µs settling time*
- *Multiple output voltage ranges possible, optionally current outputs*
- *Buffered outputs, short-circuit-proof*

Industrial Standard
- *Safety of operation by optoisolation between VMEbus and process environment*
- *Proper wiring of analog outputs and analog parts power supply to the backplane via P2*

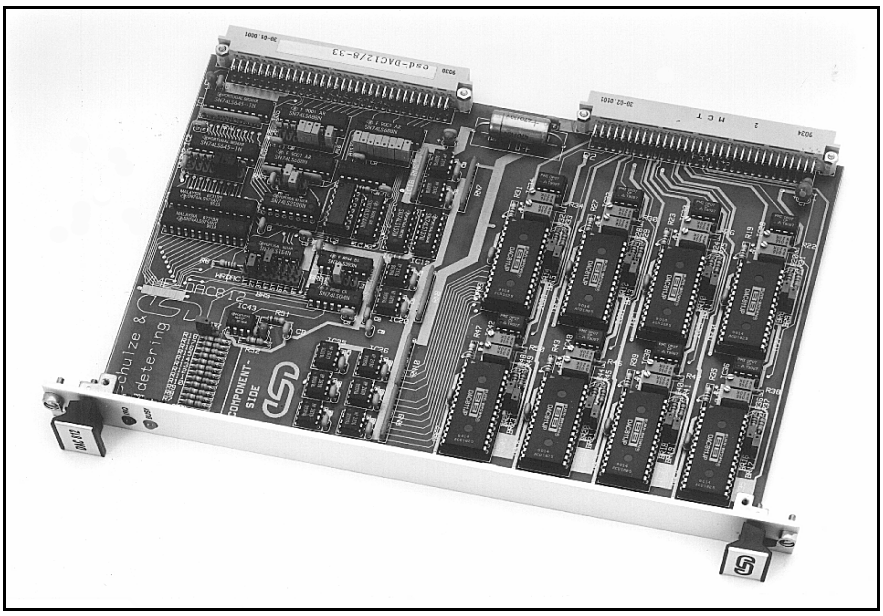

Output Circuit
The VME-DAC812 is an interface board designed for the generation of analog signals for process control purposes.

Output voltages can be selected to 0...+5 V or 0...+10 V for the unipolar version and to ±5 V or ±10 V for the bipolar version. Each version can be changed to any other by setting the corresponding jumpers on the board. Gain and offset should be adjusted after change of range. The VME-DAC812 can be ordered with the desired adjustment (see order information).

Adapter Board
Conversion of the output voltage (0...+10 V) into an output current (0...20 mA or 4...20 mA) is possible with option VME-DAC812-20mA. The VME-DAC812 can be equipped with a maximum of 8 D/A converters of the type DAC811.

Electrical Isolation
Fast optocouplers HCPL-2630 perform the electrical isolation between VMEbus and analog process section.

Wiring
The P2 connector links both the external power supply inputs of the analog section and the process signals to the system. For the connection of the signals from P2 with ribbon cable to an industrial mounted module (according to DIN EN 50022) with terminal blocks, the option DAC812-ADAPT1 or DAC812-ADAPT2 are recommended.

Software Support
Control of the VME-DAC812 via VMEbus is easily done with simple commands, so that no driver is necessary. Nevertheless, drivers for all popular operating systems are available.

(This product is not recommended for new designs.)

esd electronic system design gmbh
Vahrenwalder Str. 205
D-30165 Hannover / Germany
Phone: +49-511-372980
Fax: +49-511-633650
E-Mail: sales@esd-electronics.com

VME-DAC812
8 Analog Outputs

esd gmbh

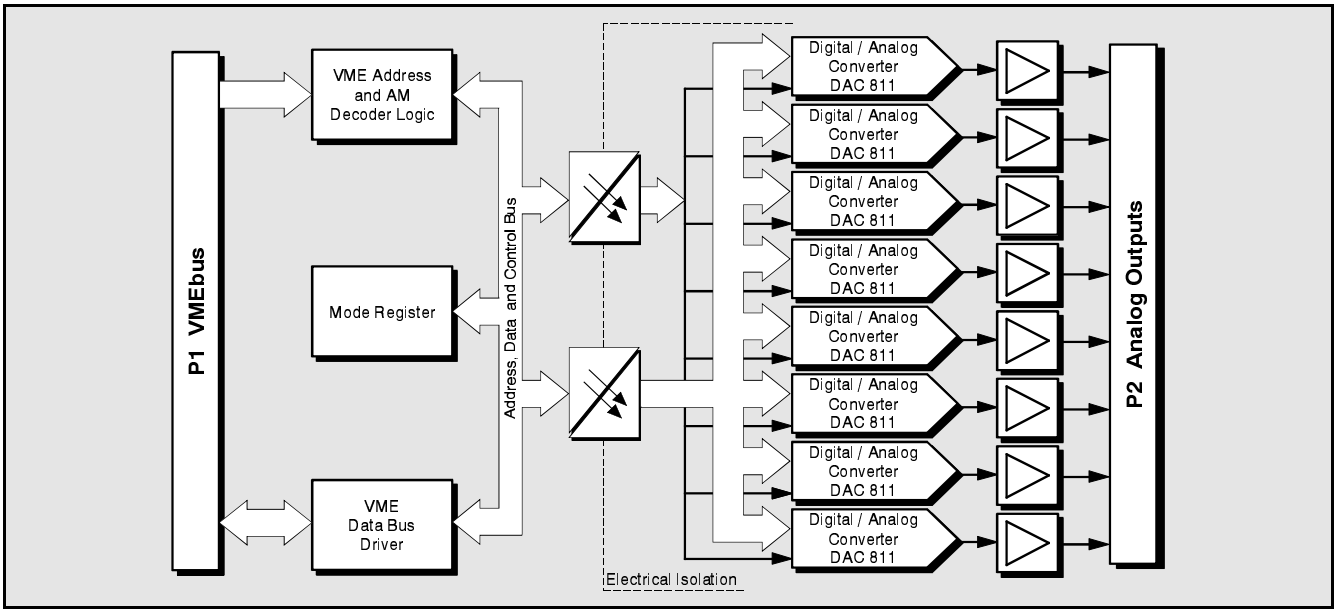

Technical Specifications:

Process section:		
Outputs:	*unipolar:*	*0...+5 V or 0...+10 V*
	bipolar:	*-5...+5 V or -10...+10 V*
	output current:	*0...20 mA or 4...20 mA*
	(with option DAC812-20mA)	
Number of channels:	*2, 4, 6 or 8 channels*	
Resolution:	*12 bits*	
Settling time:	*5 µs (VME data in to output, typ. 20 °C)*	
LED array:	*BUSY (board select)*	
Electrical isolation:	*by optocouplers*	
VMEbus section:		
Base address:	*selectable by jumpers over the whole address range of 16 Mbyte. The board covers 256 bytes.*	
Address modifier (AM):	*full AM decoding additionally with don't care mode for 'supervisory'/'nonprivileged' mode*	
VMEbus revision compatibility:	*IEEE 1014 rev. C.1*	
Data transfer options:	*SADO24, SD16*	
General:		
Ambient temperature:	*0...70 °C*	
Humidity:	*max. 90%, non-condensing*	
Connector types:	*P1: DIN 41612-C96* *P2: DIN 41612-C64*	
Board size:	*160 mm x 233 mm*	
VME dimensions:	*6U height, 1 slot width*	
Weight:	*350 g*	
Power consumption:	*typ. 1 A at 5 VDC*	

General (continued):	
External power consumption for analog section:	*+15 V / max. 200 mA* *-15 V / max. 250 mA* *+5 V / max. 200 mA*

Order information:		
Designation		*Order no.*
VME-DAC812-x	*Ux channels unipolar 0...+10 V (x = 8, 6, 4, 2)*	*V.1702.0x*
VME-DAC812-xB	*x channels bipolar -10...+10 V (x = 8, 6, 4, 2)*	*V.1702.1x*
VME-DAC812-ADAPT1	*Adapter module with screw terminal blocks, connection to P2*	*V.1702.09*
VME-DAC812-ADAPT2	*Adapter module with clamp terminal blocks, connection to P2*	*V.1702.10*
VME-DAC812-20mA-x	*Adapter for conversion to 0(4)...20 mA (to be used together with DAC812-xU)*	*V.1702.2x (x = 8, 6, 4, 2)*
VME-DAC812-P2VCC	*15 V connection for P2*	*V.1702.90*
VME-TVPS30/5/15	*Triple voltage power supply for analog section, 30 VA, linear*	*V.1911.15*
VME-DAC812-OS9	*C driver for OS-9 as source code*	*P.1702.50*
VME-DAC812-VxW	*C driver for VxWorks as source code*	*P.1702.56*

esd electronic system design gmbh
Vahrenwalder Str. 205
D-30165 Hannover / Germany
Phone: +49-511-372980
Fax: +49-511-633650
E-Mail: sales@esd-electronics.com