VME-CAN2, VME-CAN2B
2 Interfaces to CAN or DeviceNet

esd gmbh

Intelligent CAN-Controller
- *Full CAN controller by integrated firmware*
- *BASIC CAN controller 82C200 or full CAN controller 82527*

CAN-Interface
- *Electrical isolation by optocouplers*
- *Differential CAN layer*
- *Data transfer rate up to 1 Mbit/s*

CAN Protocol Support
- *CAL/CMS and CANopen*
- *DeviceNet*
- *SDS Smart Distributed System*
- *Multi-Net support*

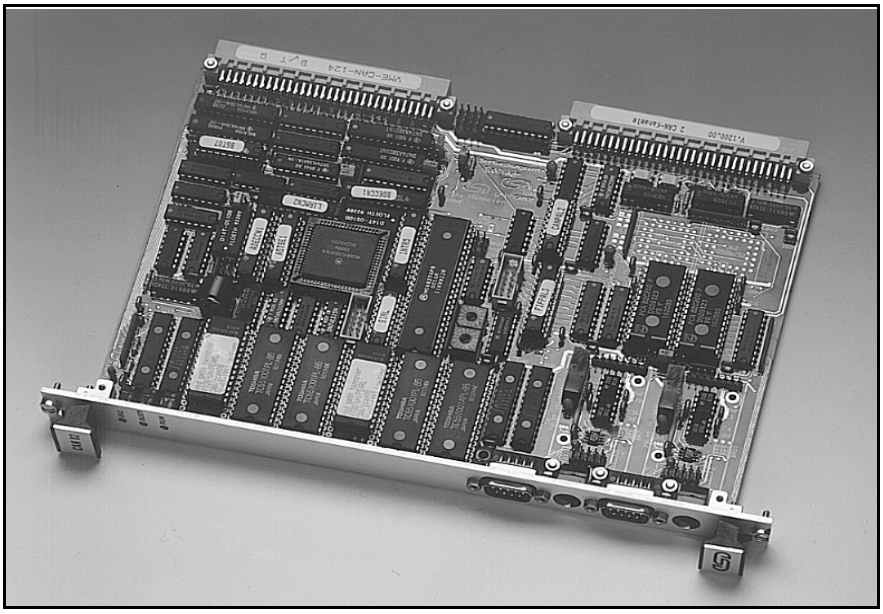

Intelligent Controller Kernel
The VMEbus board VME-CAN2 is an intelligent interface equipped with 2 independent CAN channels and with an additional serial port for programming and service purposes. The board includes all necessary components on a VMEbus 6U board and needs only one slot.

The VME-CAN2 contains a local MC 68000 CPU at 20 MHz clock frequency and 512 kB shared SRAM as well as a bidirectional 4 kwords FIFO interface for the processing of complex CAN data transfer protocols.

High Speed CAN Controller
The BASIC CAN Controller 82C200 is used normally as the controller component. The integrated firmware enables operation as a full CAN controller. The version VME-CAN2B used the controller 82527. It works as a master for standard (11-bits identifer) or for extended- (29-bits identifier) CAN protocol.
The physical CAN layer is according to ISO 11898 for a maximum baudrate of 1 Mbit/s. The CAN channels are electrically isolated from each other as well as from the VMEbus section. The local power supply is performed by DC to DC converters.

Failsafe CAN Protocol
The extremely error tolerant CAN protocol (Hamming distance = 6) is excellently suited for the construction of decentralized I/O networks, where a safe and manufacturer-independent communication protocol is necessarybecause of the variety of applications.

The advantages of the CAN protocol mainly result from the transfer frame standardized in the automobile industry, from the high transfer rate of up to 1 Mbit/s and from the error tolerance for extremely disturbed environment. Additionally the CAN protocol is self-arbitrating and has multimaster capability, which enables the user to interconnect in a single CAN network various sensors, actuators, CAN I/O modules or process controllers (esd-Xbus, VMEbus).

Decentralized Communication
The VME-CAN2 is suitable for communication with other VMEbus systems or esd-Xbus controller systems (e.g. esd-XCAN) or PC's, as well as for operation of a fast decentralized I/O network with CAN I/O modules. The standardized higher layer protocol CAL/CMS is available as a master or slave package for nearly all operating systems. Moreover a complete software package for SDS master operation is available.

Firmware On-Board
A base driver for the VME-CAN2 including extensive service and diagnostic firmware on-board is contained as a standard.
Base functions such as CAN monitoring or coupling of the two CAN nets are easy to use.
The shared RAM interface and the FIFO interface at the VMEbus section makes the implementation of different operating systems, e.g. VxWorks, OS-9, UNIX, PDOS, VRTX32 or RTOS-UH easy to realize.

(This product is not recommended for new designs.)

esd electronic system design gmbh
Vahrenwalder Str. 205
D-30165 Hannover / Germany

Phone: +49-511-372980
Fax: +49-511-633650
E-Mail: sales@esd-electronics.com

VME-CAN2, VME-CAN2B
2 Interfaces to CAN or DeviceNet

esd gmbh

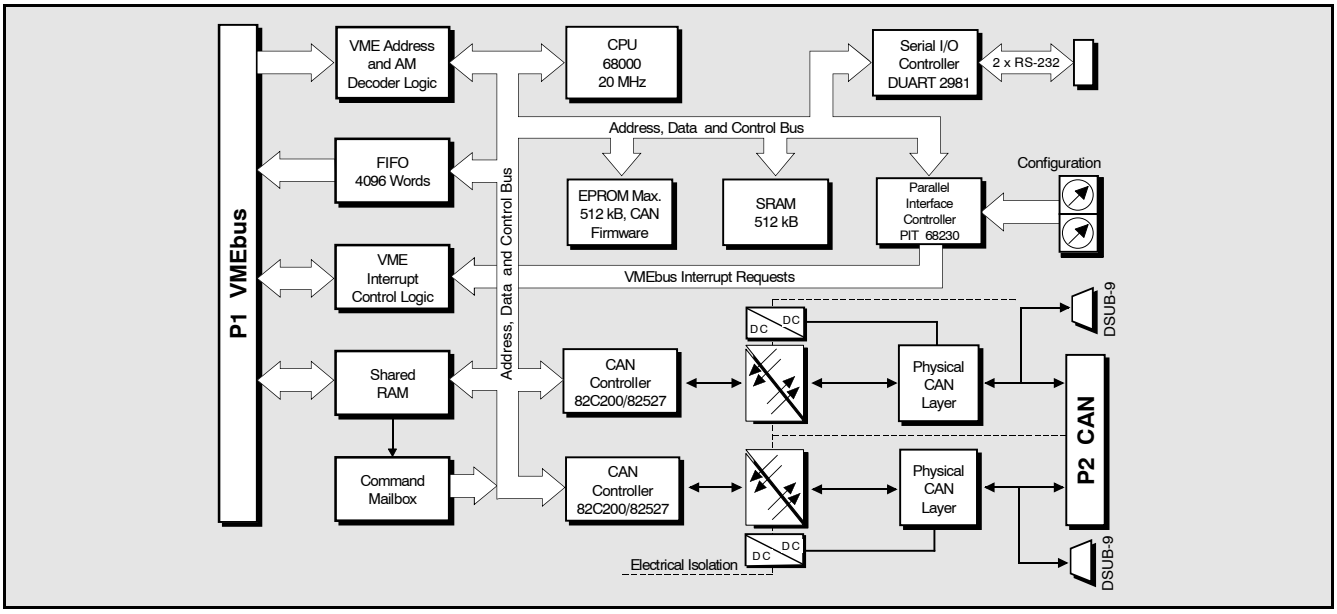

Technical Specifications:

CPU and VMEbus section:	
CPU:	*68000, 20 MHz*
Memory:	*up to 512 kbytes battery-backed SRAM with CRC check and 1 Mbyte EPROM, 4 kwords FIFO*
Base address:	*selectable by jumpers over the whole address range of 4-Gbytes/16 Mbytes. The board covers 512 kbytes.*
Address modifier (AM):	*full AM decoding additionally with don't care mode for 'supervisory'/'nonprivileged' mode*
VMEbus revision compatibility:	*IEEE 1014 rev. C.1*
Data transfer options:	*SADO32, SD16*

CAN adaption:	
CAN interfaces:	*2 CAN interfaces, each of which is equipped with basic CAN controller 82C200 with integrated software for operation as full CAN controller or version VME-CAN2B (according CAN2.0A/ 2.0B) with 2 Intel CAN controllers 82527 for normal or extended CAN*
Physical layer:	*differential, ISO 11898*
Baudrate:	*max. 1 Mbit/s*
Electrical isolation:	*by fast optocouplers to the CAN bus and by local DC to DC converters*

General:	
Temperature:	*0...50 /C*
Humidity:	*max. 90%, non-condensing*
Connector types:	*P1: DIN 41612 - C96* *P2: DIN 41612 - C96*
Board size:	*160 mm x 233 mm*
VME dimensions:	*6 U height, 1 slot width*
Weight:	*620 g*
Power supply:	*one DC to DC converter for each analog supply voltage at the CAN section*
Power consumption:	*P1: 2.5 A/ +5 V ±5 %* *300 mA/ +12 V ±5 %*

Order information:

Designation		*Order no.*
VME-CAN2	*Intelligent CAN interface board 2 independent CAN 2.0B channels*	*V.1405.02*
VME-CAN2-B	*Intelligent CAN interface board 2 independent CAN 2.0B channels*	*V.1405.03*
VME-CAN2-VxWorks	*source code driver for VxWorks*	*P.1405.56*
VME-CAN2-LynxOS	*source code driver for LynxOS*	*P.1405.53*
VME-CAN2-OS9	*source code driver for OS-9*	*P.1405.50*
VME-CAN2-UNIX	*source code driver for UNIX*	*P.1405.54*
Higher layer prptocols as CAL, CANopen and DeviceNet for VMEbus master and various operating systems are available		
VME-CAN2-ME	*English user's manual code*	*P.1405.21*

esd electronic system design gmbh
Vahrenwalder Str. 205
D-30165 Hannover / Germany

Phone: +49-511-372980
Fax: +49-511-633650
E-Mail: sales@esd-electronics.com